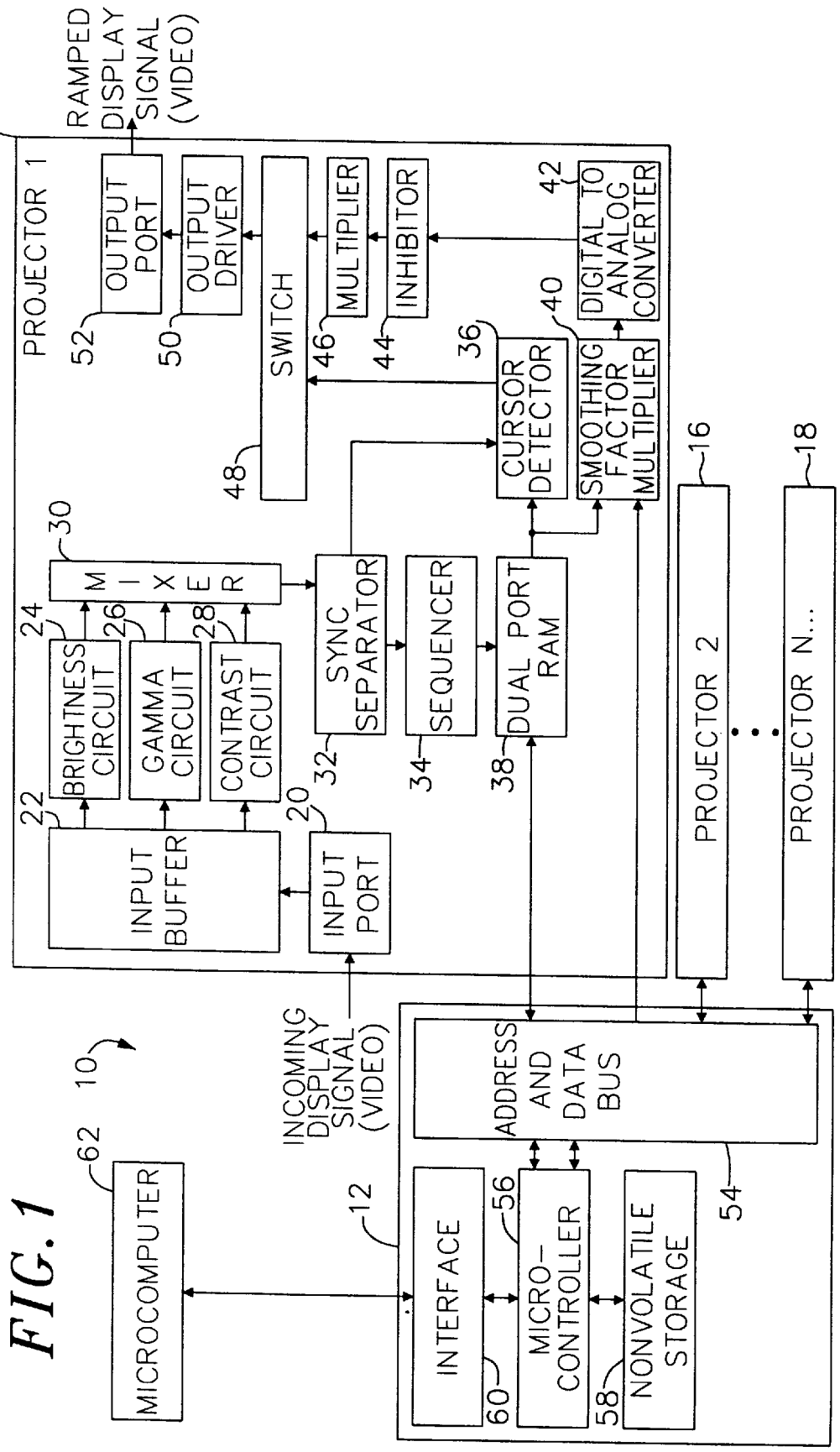
RAMPED DISPLAY SIGNAL (VIDEO)
14
PROJECTOR 1
OUTPUT PORT
52
OUTPUT DRIVER
50
SWITCH
48
MULTIPLIER
46
INHIBITOR
44
DIGITAL TO ANALOG CONVERTER
42
CURSOR DETECTOR
36
SMOOTHING FACTOR MULTIPLIER
40
30
M I X E R
24
BRIGHTNESS CIRCUIT
26
GAMMA CIRCUIT
28
CONTRAST CIRCUIT
22
INPUT BUFFER
20
INPUT PORT
SYNC SEPARATOR
32
SEQUENCER
34
DUAL PORT RAM
38
PROJECTOR 2
16
PROJECTOR N...
18
INCOMING DISPLAY SIGNAL (VIDEO)
ADDRESS AND DATA BUS
54
10
62
MICROCOMPUTER
12
INTERFACE
60
56
MICRO-CONTROLLER
58
NONVOLATILE STORAGE

FIG. 1