US009510522B2

(12) **United States Patent**
Yrjänä et al.

(10) **Patent No.: US 9,510,522 B2**
(45) **Date of Patent: Dec. 6, 2016**

(54) **BOOM STRUCTURE**

(75) Inventors: **Vesa Yrjänä**, Iisalmi (FI); **Pentti Hukkanen**, Kiuruvesi (FI); **Jorma Hyvönen**, Iisalmi (FI); **Marko Halonen**, Iisalmi (FI)

(73) Assignee: **PONSSE OYJ**, Vieremä (FI)

(*) Notice: Subject to any disclaimer, the term of this patent is extended or adjusted under 35 U.S.C. 154(b) by 20 days.

(21) Appl. No.: **14/239,501**

(22) PCT Filed: **Jul. 26, 2012**

(86) PCT No.: **PCT/FI2012/050755**

§ 371 (c)(1),
(2), (4) Date: **Mar. 12, 2014**

(87) PCT Pub. No.: **WO2013/026951**

PCT Pub. Date: **Feb. 28, 2013**

(65) **Prior Publication Data**

US 2014/0193231 A1 Jul. 10, 2014

(30) **Foreign Application Priority Data**

Aug. 19, 2011 (FI) 20115811

(51) **Int. Cl.**

B66C 23/00	(2006.01)
B66F 9/00	(2006.01)
E02F 3/00	(2006.01)
A01G 23/00	(2006.01)
B66C 23/42	(2006.01)

(52) **U.S. Cl.**
CPC ***A01G 23/00*** (2013.01); ***B66C 23/42*** (2013.01)

(58) **Field of Classification Search**
CPC E02F 3/34; E02F 3/38; E02F 3/627; A01G 23/00; B66C 23/42
USPC 414/722
See application file for complete search history.

(56) **References Cited**

U.S. PATENT DOCUMENTS

2,738,889	A	3/1956	Fritsch	
3,227,295	A	1/1966	Hamilton et al.	
4,293,270	A *	10/1981	Prime	E02F 3/32 212/231
4,808,061	A	2/1989	Cook et al.	
4,968,213	A *	11/1990	Langenfeld et al.	414/686
5,171,124	A	12/1992	Foster	
5,261,780	A *	11/1993	Perry	414/723
5,308,216	A	5/1994	Herolf	
5,544,435	A *	8/1996	Somero	E02F 3/404 294/104
7,452,177	B2 *	11/2008	Gokita	E02F 3/301 414/685
7,832,128	B2 *	11/2010	Doucette	E02F 3/30 37/379
2003/0031547	A1 *	2/2003	Stumvoll et al.	414/723

(Continued)

FOREIGN PATENT DOCUMENTS

FI	U950150	6/1995
GB	2 392 431 A	3/2004
SU	169933	3/1964
SU	375054	3/1973

(Continued)

Primary Examiner — Stephen Vu
(74) *Attorney, Agent, or Firm* — Birch, Stewart, Kolasch & Birch, LLP

(57) **ABSTRACT**

A boom structure (**2**) on a work machine (**1**) including at least two boom branches (**2***a*, **2***b*) and a main boom structure (**2***c*) extending from their convergence area (**4**) substantially in a working direction. Thus the boom structure (**2**) provides a fork-like structure.
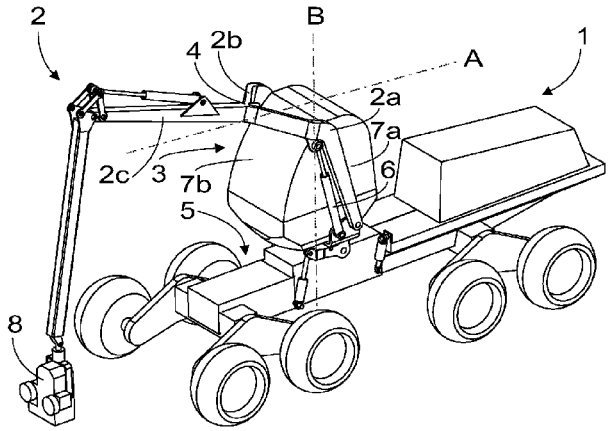
17 Claims, 3 Drawing Sheets