9722X

# W. A. Arnold.

## Cooking Stove.
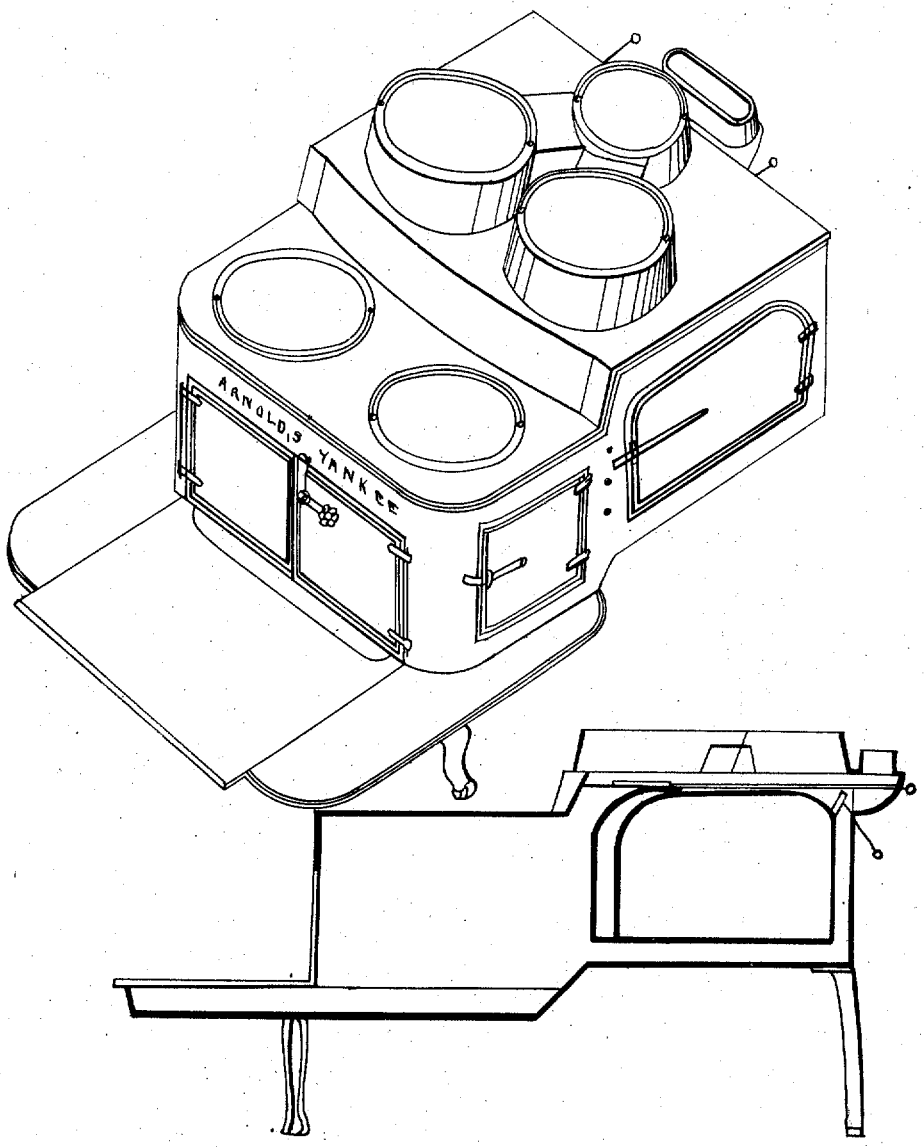
Patented Jun. 16, 1836.