US009409722B2

(12) **United States Patent**
Bruch et al.

(10) **Patent No.: US 9,409,722 B2**
(45) **Date of Patent: Aug. 9, 2016**

(54) **TRANSPORT STAR FOR CONTAINERS, CONTAINER TRANSPORT SECTION, AND SYSTEM FOR HANDLING CONTAINERS**

(71) Applicant: **KHS GmbH**, Dortmund (DE)

(72) Inventors: **Bernd Bruch**, Weinsheim (DE); **Ludwig Clüsserath**, Bad Kreuznach (DE)

(73) Assignee: **KHS GmbH**, Dortmund (DE)

(*) Notice: Subject to any disclaimer, the term of this patent is extended or adjusted under 35 U.S.C. 154(b) by 0 days.

(21) Appl. No.: **14/422,056**

(22) PCT Filed: **Jul. 27, 2013**

(86) PCT No.: **PCT/EP2013/002230**

§ 371 (c)(1),
(2) Date: **Feb. 17, 2015**

(87) PCT Pub. No.: **WO2014/026732**

PCT Pub. Date: **Feb. 20, 2014**

(65) **Prior Publication Data**

US 2015/0232283 A1 Aug. 20, 2015

(30) **Foreign Application Priority Data**

Aug. 15, 2012 (DE) 10 2012 016 124

(51) **Int. Cl.**

B65G 47/22	(2006.01)
B65G 45/22	(2006.01)
B65G 47/84	(2006.01)
B29C 49/42	(2006.01)
B29L 31/00	(2006.01)

(52) **U.S. Cl.**

CPC ***B65G 45/22*** (2013.01); ***B29C 49/4273*** (2013.01); ***B65G 47/846*** (2013.01); *B29C 2949/00* (2013.01); *B29L 2031/7158* (2013.01)

(58) **Field of Classification Search**

CPC B65B 31/022
USPC 198/493; 53/110; 141/85, 89
See application file for complete search history.

(56) **References Cited**

U.S. PATENT DOCUMENTS

2,620,111	A	*	12/1952	Hohl	B65B 31/04 141/11
2,630,957	A	*	3/1953	Hohl	B65B 31/00 235/145 R
3,566,575	A	*	3/1971	Lisiecki	B67C 7/0073 141/92
5,081,953	A	*	1/1992	Guthrie	C23C 16/453 118/715

(Continued)

FOREIGN PATENT DOCUMENTS

DE	93 11 106	9/1993
DE	299 06 070	9/1999

(Continued)

Primary Examiner — William R Harp
(74) *Attorney, Agent, or Firm* — Occhiuti & Rohlicek LLP

(57) **ABSTRACT**

An apparatus for conveying containers includes a transport star having a rotor that rotates around a machine axis, transport positions disposed around the star, and a laminar-flow system. Each transport position has a container carrier to hold a container. The laminar-flow system, which is above the container carriers and above the containers' trajectory, prevents container contamination while the containers are disposed on the transport positions. The laminar-flow system has openings that direct a stream of sterile medium downward along outer surfaces of the containers.
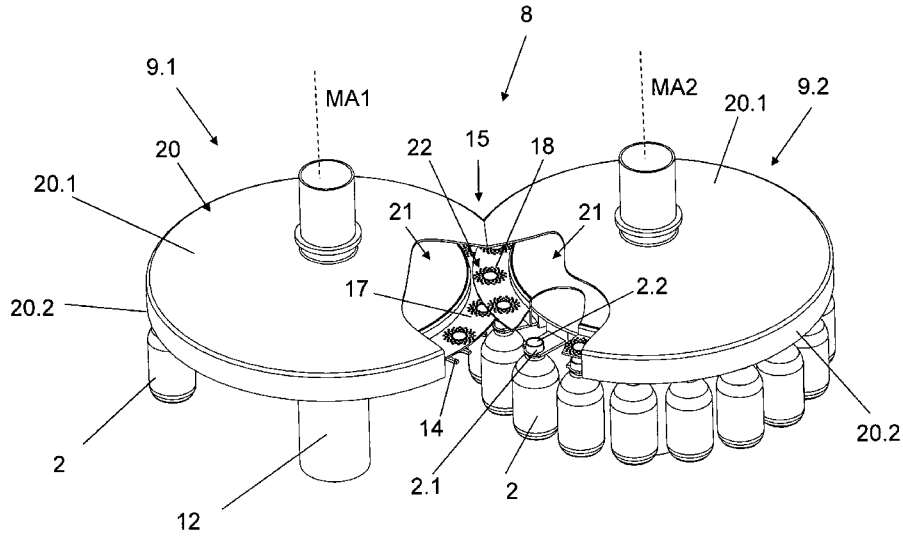
16 Claims, 7 Drawing Sheets