US009408722B2

(12) **United States Patent**
Halpin

(10) **Patent No.: US 9,408,722 B2**
(45) **Date of Patent: Aug. 9, 2016**

(54) **EXTERNAL BREAST PROSTHESIS**

(71) Applicant: **Sean P. Halpin**, Rochester Hills, MI (US)

(72) Inventor: **Sean P. Halpin**, Rochester Hills, MI (US)

(*) Notice: Subject to any disclaimer, the term of this patent is extended or adjusted under 35 U.S.C. 154(b) by 0 days.

(21) Appl. No.: **14/053,180**

(22) Filed: **Oct. 14, 2013**

(65) **Prior Publication Data**

US 2014/0046441 A1 Feb. 13, 2014

Related U.S. Application Data

(62) Division of application No. 12/915,365, filed on Oct. 29, 2010, now Pat. No. 8,557,168.

(60) Provisional application No. 61/255,910, filed on Oct. 29, 2009.

(51) **Int. Cl.**

A61F 2/52	(2006.01)
B29C 45/00	(2006.01)
A61F 2/50	(2006.01)
B29K 83/00	(2006.01)
B29L 31/00	(2006.01)

(52) **U.S. Cl.**

CPC ***A61F 2/52*** (2013.01); ***B29C 45/006*** (2013.01); *A61F 2002/501* (2013.01); *A61F 2002/5053* (2013.01); *A61F 2002/526* (2013.01); *B29K 2083/00* (2013.01); *B29L 2031/7532* (2013.01)

(58) **Field of Classification Search**

CPC A61F 2002/501; A61F 2002/5053; A61F 2002/526; A61F 2/52; B29K 2083/00; B29L 2031/7532

USPC 623/7

See application file for complete search history.

(56) **References Cited**

U.S. PATENT DOCUMENTS

4,199,825	A	4/1980	Knoche	
4,600,551	A	7/1986	Erb	
4,676,795	A	6/1987	Grundei	
4,681,587	A	7/1987	Eberl et al.	
5,035,758	A	7/1991	Degler et al.	
5,376,323	A	12/1994	Eaton	
5,527,359	A	6/1996	Nakamura et al.	
5,603,791	A	2/1997	Weber-Unger et al.	
5,607,473	A	3/1997	Weber-Unger et al.	
5,700,288	A	12/1997	Eaton	
5,824,075	A	10/1998	Thielbar	
6,066,220	A	5/2000	Schneider-Nieskens	
6,086,801	A	7/2000	Eaton	
6,136,027	A	10/2000	Jackson	
6,162,250	A	12/2000	Malice, Jr. et al.	
6,451,139	B1	9/2002	Weber-Unger et al.	
6,520,989	B1	2/2003	Eaton	
6,564,086	B2	5/2003	Marchitto et al.	
7,058,439	B2	6/2006	Eaton et al.	
7,628,811	B1 *	12/2009	Gaskill	A61F 2/52 623/7
8,557,168	B2	10/2013	Halpin	
2011/0125262	A1	5/2011	Halpin	

* cited by examiner

Primary Examiner — Robert J Grun

(74) *Attorney, Agent, or Firm* — Ingrassia Fisher & Lorenz, P.C.

(57) **ABSTRACT**

An external breast prosthesis having a thin-walled outer shell and an air-filled interior cavity. The prosthesis is fabricated using a method and die set to form the two-part shell without internal supporting structure. The method provides a repeatable process which yields a prosthesis having durable air-tight seal between the anterior and posterior shell and a Class-A exterior surface which accurately replicates the visual and tactile characteristics of a human breast.
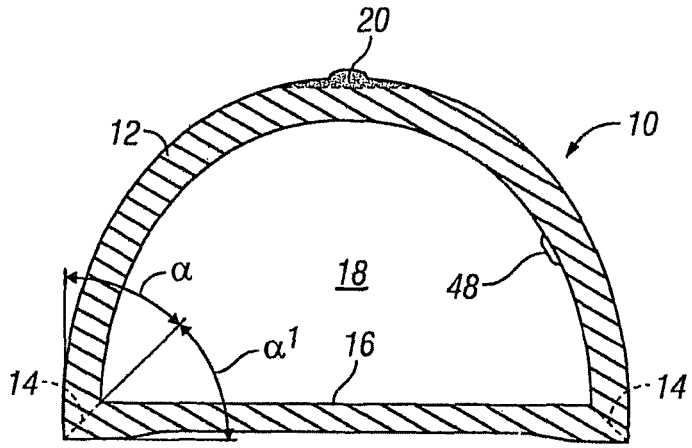
14 Claims, 3 Drawing Sheets