US009408522B2

(12) **United States Patent**
Wang et al.

(10) **Patent No.: US 9,408,522 B2**
(45) **Date of Patent: Aug. 9, 2016**

(54) **FRYER CLEANING TOOL WITH CLEANING HEAD WITH CLEANING PAD SLIDABLY MOUNTABLE THEREON**

(71) Applicant: **3M INNOVATIVE PROPERTIES COMPANY**, St. Paul, MN (US)

(72) Inventors: **DanLi Wang**, Shoreview, MN (US); **Martin E. Broen**, Milan (IT); **Perry S. Dotterman**, Maplewood, MN (US); **Robert J. Maki**, Hudson, WI (US); **Kim C. Sachs**, Woodbury, MN (US)

(73) Assignee: **3M INNOVATIVE PROPERTIES COMPANY**, St. Paul, MN (US)

(*) Notice: Subject to any disclaimer, the term of this patent is extended or adjusted under 35 U.S.C. 154(b) by 525 days.

(21) Appl. No.: **13/769,640**

(22) Filed: **Feb. 18, 2013**

(65) **Prior Publication Data**

US 2013/0233347 A1 Sep. 12, 2013

Related U.S. Application Data

(60) Provisional application No. 61/608,724, filed on Mar. 9, 2012.

(51) **Int. Cl.**

A47L 13/44	(2006.01)
A47L 17/06	(2006.01)
A47L 17/08	(2006.01)

(52) **U.S. Cl.**

CPC ***A47L 17/08*** (2013.01); ***A47L 13/44*** (2013.01); ***A47L 17/06*** (2013.01)

(58) **Field of Classification Search**

CPC A47L 13/44; A47L 17/00; A47L 17/06; A47L 17/08

See application file for complete search history.

(56) **References Cited**

U.S. PATENT DOCUMENTS

230,260	A	7/1880	Ferguson
705,983	A	7/1902	Volckening
1,558,509	A	10/1925	Schweitzer
2,635,274	A	4/1953	Hatcher
2,669,741	A	2/1954	Jelliffe
2,686,327	A	8/1954	King
2,816,313	A	12/1957	Beck
2,958,593	A	11/1960	Hoover
3,473,183	A	10/1969	Burns
3,491,397	A	1/1970	Hesener
3,537,121	A	11/1970	McAvoy
3,837,988	A	9/1974	Hennen
3,910,284	A	10/1975	Orentreich

(Continued)

FOREIGN PATENT DOCUMENTS

CN	2647219	10/2004
JP	2005-066324	3/2005
WO	WO 2009-125376	10/2009

OTHER PUBLICATIONS

International Search Report, PCT/US2013/028659, mailed Jun. 27, 2013, 3 pages.

(Continued)

Primary Examiner — Randall Chin

(74) *Attorney, Agent, or Firm* — Emily Van Vliet; Kenneth B. Wood

(57) **ABSTRACT**

A fryer cleaning tool with a sheetlike cleaning head configured to receive a sheetlike resilient fryer cleaning pad with an open-ended slitlike cavity therewithin, which pad can be slidably mounted onto the cleaning head.
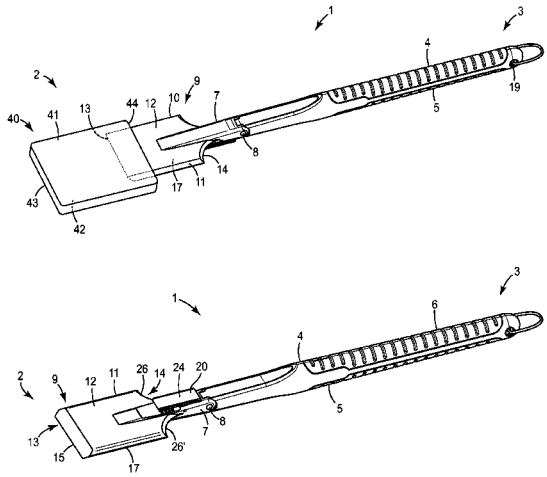
19 Claims, 7 Drawing Sheets