US009908022B1

(12) **United States Patent**
Bowe

(10) **Patent No.: US 9,908,022 B1**
(45) **Date of Patent: Mar. 6, 2018**

(54) **COMBINATION COOLER AND PORTABLE TARGET TOSSING GAME**

(71) Applicant: **Indian Industries, Inc.**, Evansville, IN (US)

(72) Inventor: **Graham R. Bowe**, Yardley, PA (US)

(73) Assignee: **Indian Industries, Inc.**, Evansville, IN (US)

(*) Notice: Subject to any disclaimer, the term of this patent is extended or adjusted under 35 U.S.C. 154(b) by 0 days.

(21) Appl. No.: **15/381,343**

(22) Filed: **Dec. 16, 2016**

(51) **Int. Cl.**

A63B 67/06	(2006.01)
F25D 31/00	(2006.01)
F25D 23/12	(2006.01)
F25D 3/06	(2006.01)
F25D 3/08	(2006.01)

(52) **U.S. Cl.**
CPC ***A63B 67/06*** (2013.01); ***F25D 3/06*** (2013.01); ***F25D 23/12*** (2013.01); ***F25D 31/007*** (2013.01); *F25D 3/08* (2013.01); *F25D 2201/126* (2013.01)

(58) **Field of Classification Search**
CPC A63B 63/06; A63B 63/00; A63B 63/08; A63B 2210/50; F25D 3/08
USPC 273/398–402; 62/457.5, 457.7
See application file for complete search history.

(56) **References Cited**

U.S. PATENT DOCUMENTS

3,802,704	A	4/1974	Genua	
4,392,653	A	7/1983	Blume, Sr.	
4,936,590	A *	6/1990	Palmer	A63B 63/08 273/285
4,982,966	A	1/1991	Teafatiller	
5,018,745	A *	5/1991	Dunse	A63F 9/0208 273/338
5,067,727	A	11/1991	Crompton	
5,165,583	A *	11/1992	Kouwenberg	A45C 11/20 206/428
D341,381	S	11/1993	Niebling	
D378,687	S	4/1997	Clark et al.	
D388,127	S	12/1997	Cavallone, Sr.	
5,863,045	A	1/1999	Watson et al.	
5,882,010	A	3/1999	Geror	
6,669,200	B1	12/2003	Knetsch et al.	
6,749,201	B2	6/2004	Kessler, Jr. et al.	
6,899,336	B2	5/2005	Michelet et al.	
7,134,662	B2	11/2006	Menendez	
7,500,674	B2 *	3/2009	Riley	A63B 67/06 273/126 R
7,861,552	B1 *	1/2011	Hughes	A45C 11/20 62/371
8,657,293	B2	2/2014	Sindaco	

(Continued)

OTHER PUBLICATIONS

Go! Gater Washer Toss [online] [retrieved on Sep. 9, 2016] Retrieved from http://www.eastpointsports.com/product/16351f_washer_toss.

Primary Examiner — Mark Graham
(74) *Attorney, Agent, or Firm* — Woodard, Emhardt, Moriarty, McNett & Henry, LLP; Charles Meyer

(57) **ABSTRACT**

Certain embodiments of the disclosure combine an insulated cooler and toss game kit, such as a washer toss game. Two insulated halves form a pair of target portions when separated or can be combined to form a case. Game playing pieces, such as washers, and target cylinders are stored within the case. The two halves are configured to allow contents, such as beverages, food and/or temperature control materials to be stored in the interior volume.
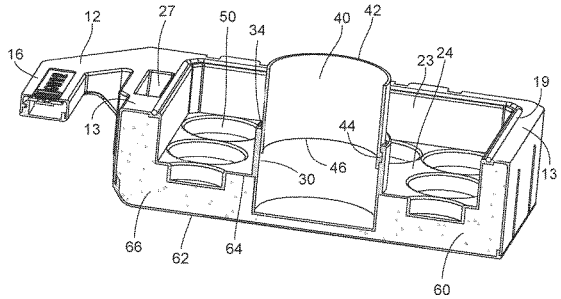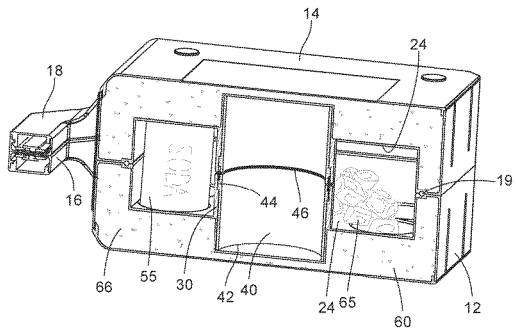
19 Claims, 4 Drawing Sheets