US006503222B2

(12) **United States Patent**
Lo

(10) **Patent No.: US 6,503,222 B2**
(45) **Date of Patent: Jan. 7, 2003**

(54) **ORAL DOSAGE DISPENSER**

(75) Inventor: **Julian B. Lo**, Old Lyme, CT (US)

(73) Assignee: **Pfizer Inc**, New York, NY (US)

(*) Notice: Subject to any disclaimer, the term of this patent is extended or adjusted under 35 U.S.C. 154(b) by 0 days.

(21) Appl. No.: **09/960,001**

(22) Filed: **Sep. 21, 2001**

(65) **Prior Publication Data**

US 2002/0036217 A1 Mar. 28, 2002

Related U.S. Application Data

(60) Provisional application No. 60/236,224, filed on Sep. 28, 2000.

(51) **Int. Cl.**[7] **A61J 7/00**

(52) **U.S. Cl.** **604/77**; 215/389; 215/DIG. 3; 215/DIG. 7; 215/DIG. 8; 220/710; 222/145.2; 222/205; 239/33

(58) **Field of Search** ..... 222/145.5, 180, 222/630, 205, 464.1, 424.5; 239/24, 33, 310; 220/703, 705, 710; 229/103.1; 215/387, 388, 389, DIG. 3, DIG. 8, DIG. 7; 604/93.01, 264, 77, 80–85

(56) **References Cited**

U.S. PATENT DOCUMENTS

2,436,505 A		2/1948	Du Rall	128/222
2,689,149 A	*	9/1954	Saltzman	239/33
3,610,483 A		10/1971	Visconti	222/478
4,211,024 A	*	7/1980	Nickell	40/406
5,085,335 A	*	2/1992	Carbaugh	220/709
5,222,940 A	*	6/1993	Wilk	604/77
6,109,538 A	*	8/2000	Villani et al.	239/33

* cited by examiner

Primary Examiner—Henry C. Yuen
Assistant Examiner—Patrick Buechner
(74) *Attorney, Agent, or Firm*—Peter C. Richardson; Gregg C. Benson; Carl J. Goddard

(57) **ABSTRACT**

The present invention provides an apparatus for facilitating the oral delivery of an active agent to a patient in need of treatment therewith, which apparatus comprises an active agent mixing chamber, a mixture delivery tube, and at least one liquid delivery tube. A mixture formed in the mixing chamber which comprises a combination of an active agent, or a pharmaceutical formulation thereof, and a liquid diluent may be delivered into the oral cavity of the patient from the mixing chamber by suction on the mixture delivery tube.
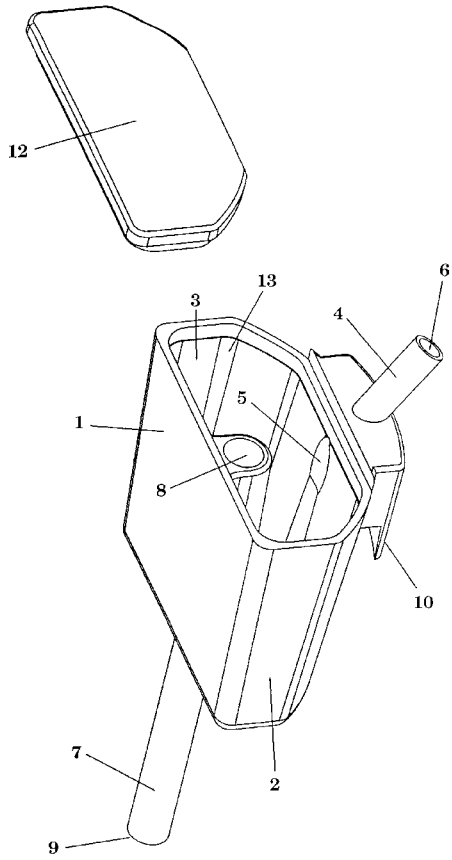
5 Claims, 2 Drawing Sheets