HINGE

Filed Dec. 10, 1965 3 Sheets-Sheet 1

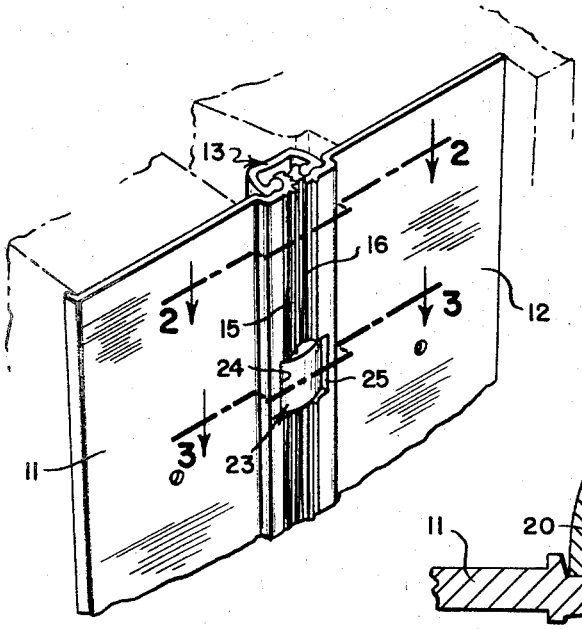

FIG. 1

FIG. 2

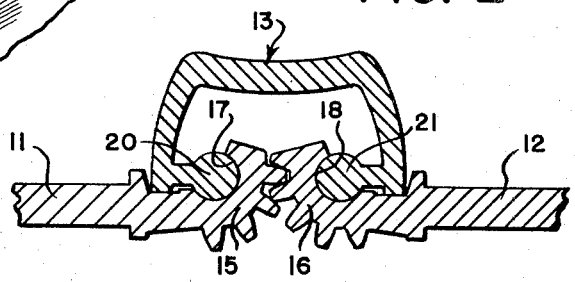

FIG. 3

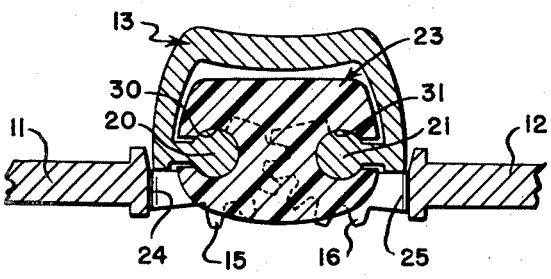

FIG. 4

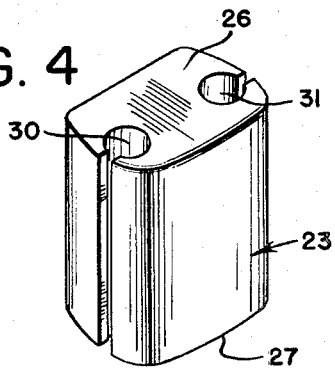

FIG. 5a

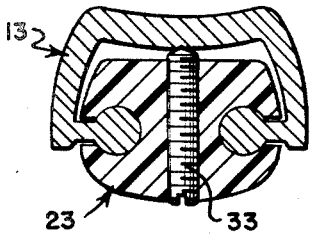

FIG. 5b

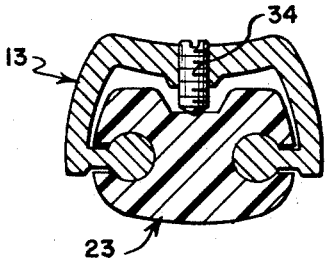

FIG. 5c

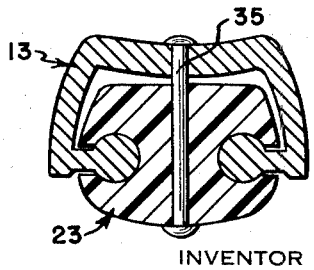

INVENTOR
Austin R. Baer
BY
Pennie, Edmonds, Morton, Taylor & Adams
ATTORNEYS