Aug. 3, 1965 F. D. POLITANO 3,198,321

LANTERN CONTAINER

Filed June 12, 1963 2 Sheets-Sheet 2

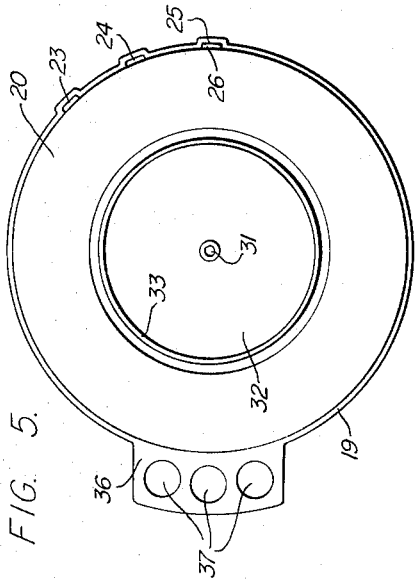

FIG. 5.

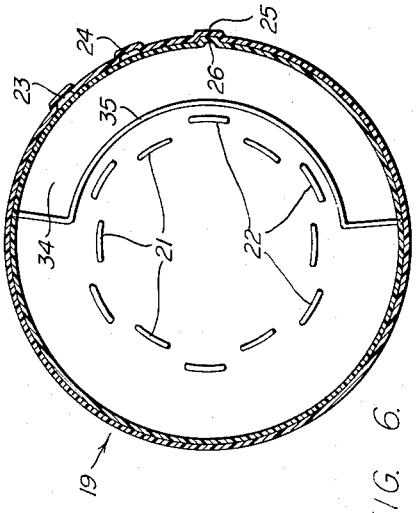

FIG. 6.

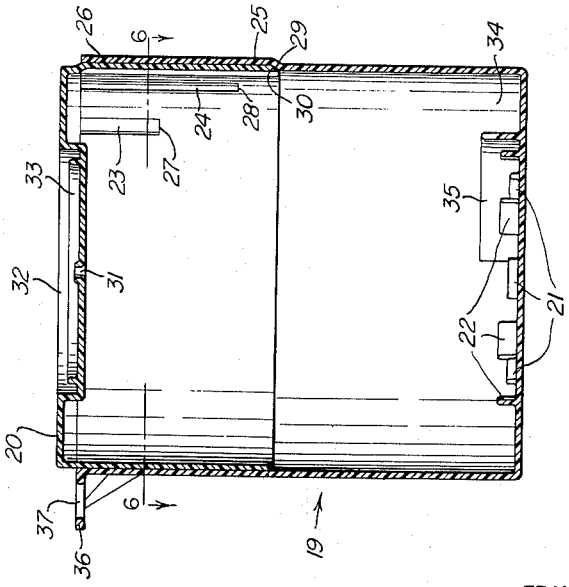

FIG. 4.

INVENTOR:
FRANK D. POLITANO,

BY
Mallinckrodt
and Mallinckrodt.
ATTORNEYS.