US005386821A

United States Patent [19]

Poterack

[11] **Patent Number: 5,386,821**

[45] **Date of Patent: Feb. 7, 1995**

[54] **BITE BLOCK FOR ORAL PASSAGEWAY**

[76] Inventor: **Karl A. Poterack**, 4422 Shavano Cross, San Antonio, Tex. 78230

[21] Appl. No.: **73,537**

[22] Filed: **Jun. 8, 1993**

[51] **Int. Cl.**[6] **A61M 16/00**; A62B 9/06; A61C 5/14

[52] **U.S. Cl.** **128/200.26**; 128/207.14; 128/DIG. 26; 128/859; 128/861

[58] **Field of Search** ..... 128/201.11, 200.26, 128/207.14, 859, 861, 912, DIG. 26

[56] **References Cited**

U.S. PATENT DOCUMENTS

316,636	4/1885	Miles .	
2,669,988	2/1954	Carpenter .	
2,693,182	11/1954	Phillips .	
2,705,959	4/1955	Elmore .	
2,820,457	1/1958	Phillips .	
2,857,911	10/1958	Bennett .	
2,882,893	4/1959	Godfroy .	
2,908,269	10/1959	Cheng .	
3,090,122	5/1963	Erickson .	
3,106,916	10/1963	Matthes .	
3,126,002	3/1964	Owens .	
3,139,088	6/1964	Galleher, Jr. .	
3,167,072	1/1965	Stone et al. .	
3,228,107	1/1966	Zandberg .	
3,306,298	2/1967	Raimo .	
3,496,936	2/1970	Gores .	
3,518,988	7/1970	Gores	128/861
3,542,321	11/1970	Kahabla .	
3,568,680	3/1971	Raimo .	
3,576,187	4/1971	Odders .	
3,768,465	10/1973	Helmer .	
3,774,616	11/1973	White et al. .	
3,924,636	12/1975	Addison .	
3,930,507	1/1976	Berman .	
3,976,080	8/1976	Bornhorst et al.	128/DIG. 26
3,977,407	8/1976	Coleman et al. .	
4,030,493	6/1977	Walters et al. .	
4,031,888	6/1977	Walters	128/859
4,090,518	5/1978	Elam .	
4,112,936	9/1978	Blachly .	
4,166,467	9/1979	Abramson .	
4,167,946	9/1979	Sandstrom .	
4,198,970	4/1980	Luomanen .	
4,223,671	9/1980	Muto .	
4,256,099	3/1981	Dryden .	
4,270,529	6/1981	Muto .	
4,326,515	4/1982	Shaffer et al. .	
4,329,984	5/1982	Kervin .	
4,331,143	5/1982	Foster .	
4,344,428	8/1982	Sherman .	
4,351,331	9/1982	Gereg .	
4,356,821	11/1982	Rind .	
4,425,911	1/1984	Luomanen et al. .	
4,495,945	1/1985	Liegner .	
4,519,386	5/1985	Sullivan	128/859
4,527,559	7/1985	Roxburg et al. .	
4,640,273	2/1987	Greene et al. .	
4,744,358	5/1988	McGinnis .	
4,832,019	5/1989	Weinstein et al. .	
4,896,667	1/1990	Magnuson et al. .	
4,901,737	2/1990	Toone .	
5,009,227	4/1991	Nieuwstad .	
5,031,611	7/1991	Moles	128/201.11
5,062,422	11/1991	Kinkade	128/201.11
5,152,301	11/1992	Kittelsen et al.	128/861
5,203,324	4/1993	Kinkade	128/201.11
5,339,832	8/1994	Kittelsen et al.	128/861

FOREIGN PATENT DOCUMENTS

92803	5/1962	Denmark	128/200.26

Primary Examiner—Kimberly L. Asher
Attorney, Agent, or Firm—Gunn, Lee & Miller

[57] **ABSTRACT**

The device of the present invention is a bite block for use with endotracheally intubated patients. The bite block is generally U-shaped and made of a hard but pliable material. The termini of each of the legs of the "U" are wedge shaped, being thinner at the terminus of each leg. A curved rib connects the two legs. The combination of the wedge-shaped legs and the curved rib allow the interjaw compressive forces to be borne by the molars rather than the incisors or front teeth.
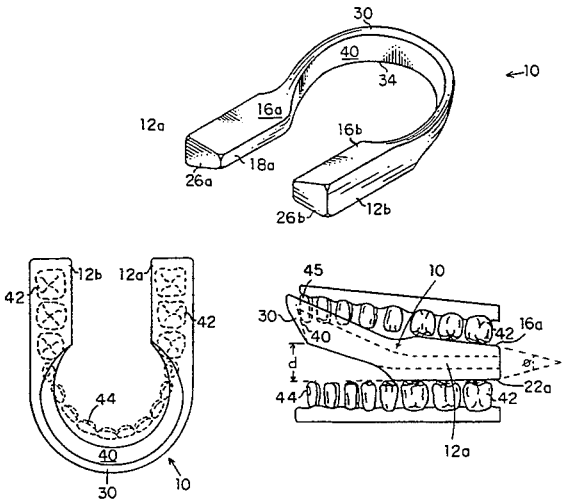
9 Claims, 4 Drawing Sheets