FIG. 1A

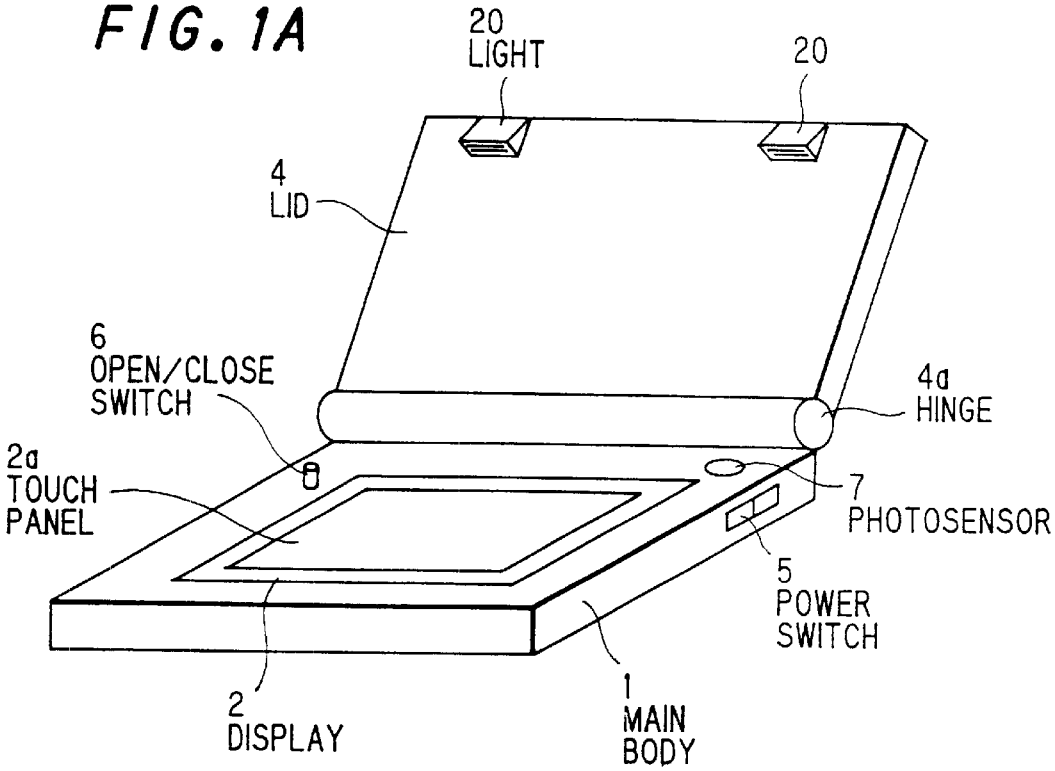
20
LIGHT
20
4
LID
6
OPEN/CLOSE
SWITCH
4a
HINGE
2a
TOUCH
PANEL
7
PHOTOSENSOR
5
POWER
SWITCH
2
DISPLAY
1
MAIN
BODY

FIG. 1B

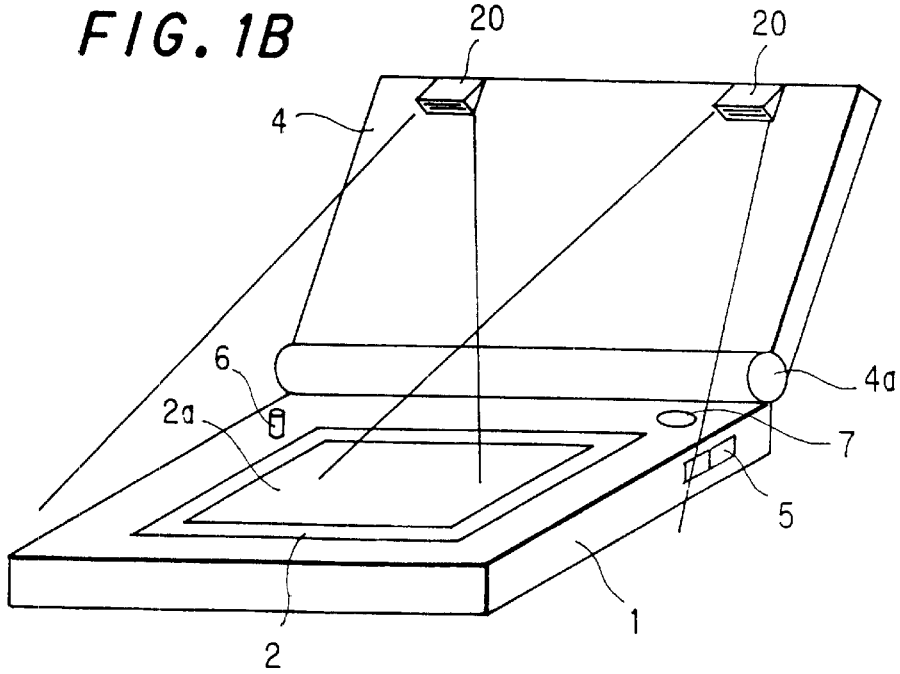
20
20
4
6
4a
2a
7
5
1
2