350-437 SR CROSS REFERENCE SEARCH ROOM
XR 2,878,721
TX 70/1E

March 24, 1959 C. W. KANOLT 2,878,721

MULTIFOCAL OPHTHALMIC LENSES

Filed Feb. 3, 1954 4 Sheets-Sheet 1

X 2009

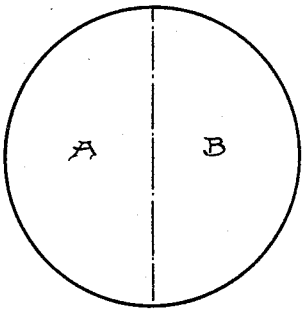

FIG. 1.

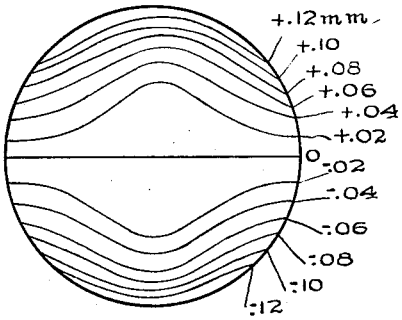

FIG. 2.

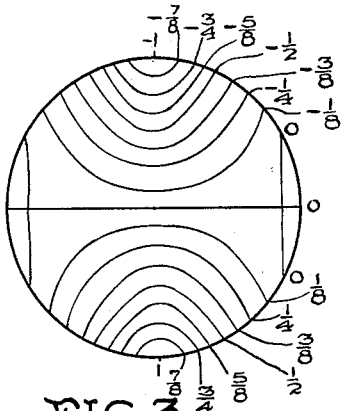

FIG. 3.

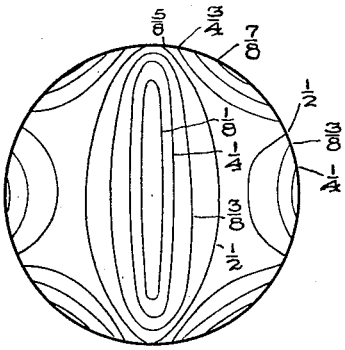

FIG. 4.

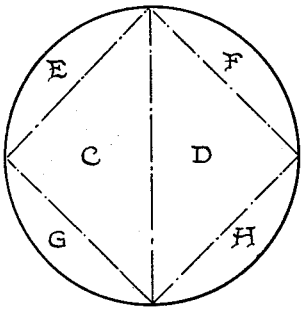

FIG. 5.

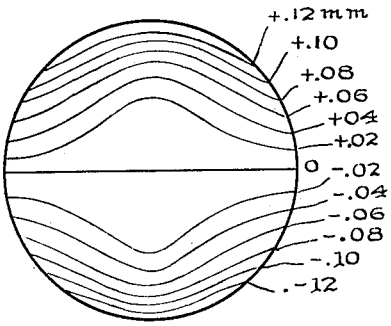

FIG. 6.

Clarence W. Kanolt
INVENTOR.

BY
Pennie, Edmonds, Morton, Barrows, + Taylor
ATTORNEYS

2878721
OR IN 351/169