US005461321A

United States Patent [19]

Sanders et al.

[11] Patent Number: 5,461,321

[45] Date of Patent: Oct. 24, 1995

[54] **APPARATUS AND METHOD FOR MEASURING CAPACITANCE FROM THE DURATION OF A CHARGE-DISCHARGE CHARGE CYCLE**

[75] Inventors: **Gary G. Sanders**; **Brian J. Goodwin**, both of Rock Falls, Ill.

[73] Assignee: **Penberthy, Inc.**, Prophetstown, Ill.

[21] Appl. No.: **123,316**

[22] Filed: **Sep. 17, 1993**

[51] **Int. Cl.**[6] **G01R 27/26**

[52] **U.S. Cl.** **324/678**; 320/1

[58] **Field of Search** 324/676, 678, 324/681; 320/1

[56] **References Cited**

U.S. PATENT DOCUMENTS

3,778,708	12/1973	Anders et al.	324/701
3,993,947	11/1976	Maltby et al.	324/610
4,146,834	3/1979	Maltby et al.	324/610
4,499,766	2/1985	Fathauer et al.	73/304 C
4,558,274	12/1985	Carusillo	324/678 X
4,939,519	7/1990	Elbert	320/1 X
5,045,797	9/1991	Kramer et al.	324/667
5,278,513	1/1994	Kramer et al.	324/667
5,294,889	3/1994	Heep et al.	324/678

Primary Examiner—Kenneth A. Wieder
Assistant Examiner—Glenn W. Brown
Attorney, Agent, or Firm—Jenner & Block

[57] **ABSTRACT**

A highly accurate system to measure the value of a capacitor using proportionality against a time base reference. The capacitor under test is linearly sequentially charged in three discrete steps yielding integrated net neutral charge as well as a delay for discharging dielectric absorption during each measurement cycle.
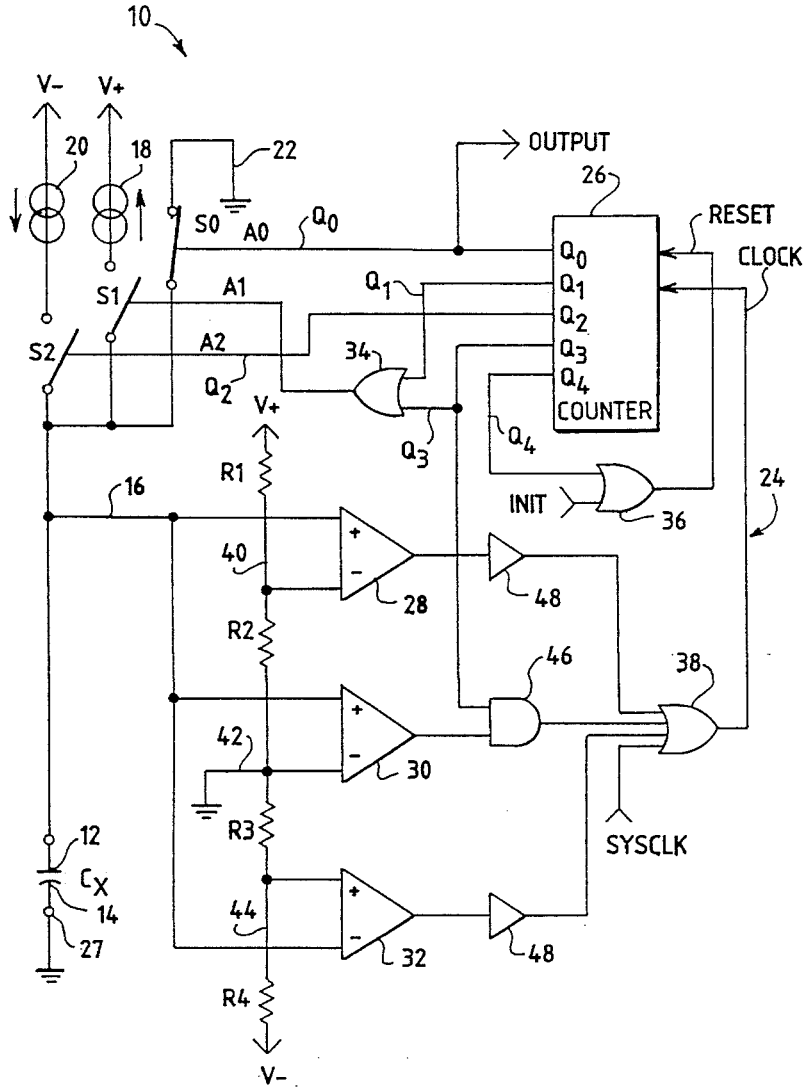
20 Claims, 3 Drawing Sheets