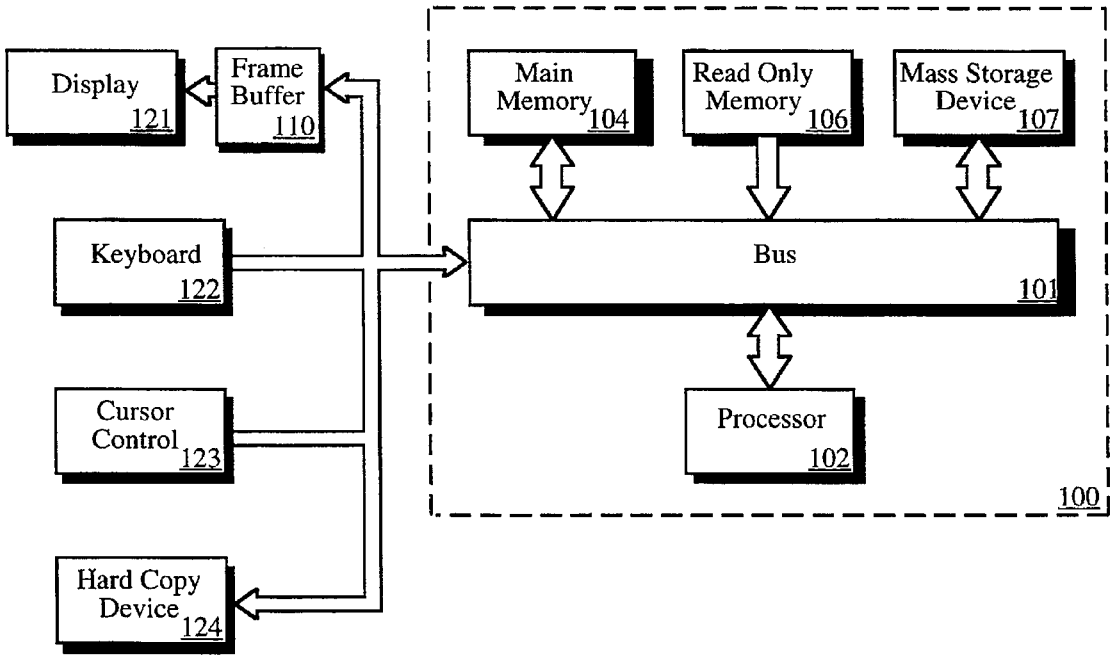
Display
121
Frame
Buffer
110
Main
Memory
104
Read Only
Memory
106
Mass Storage
Device
107
Keyboard
122
Bus
101
Cursor
Control
123
Processor
102
100
Hard Copy
Device
124

Fig. 1