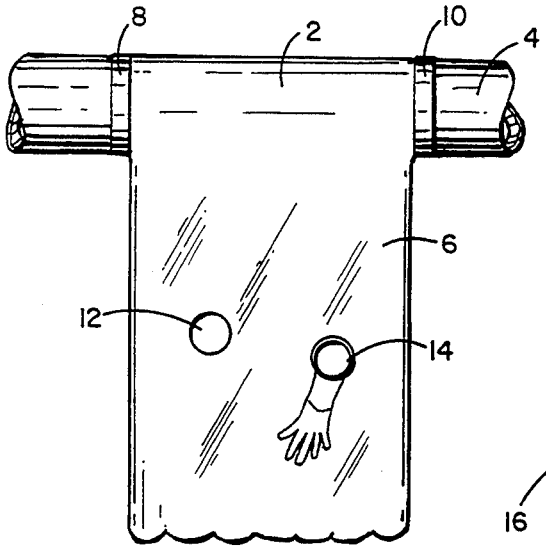

(PRIOR ART)

FIG. 1a

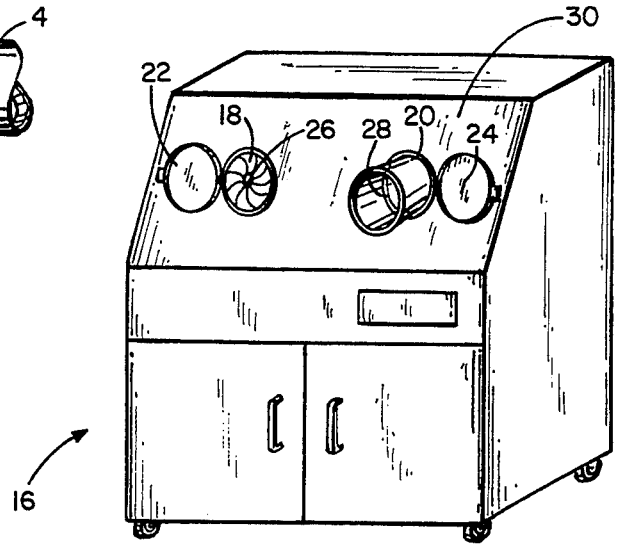

(PRIOR ART)

FIG. 1b

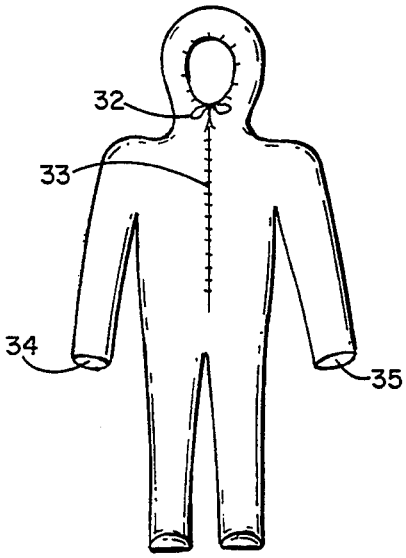

(PRIOR ART)

FIG. 1c

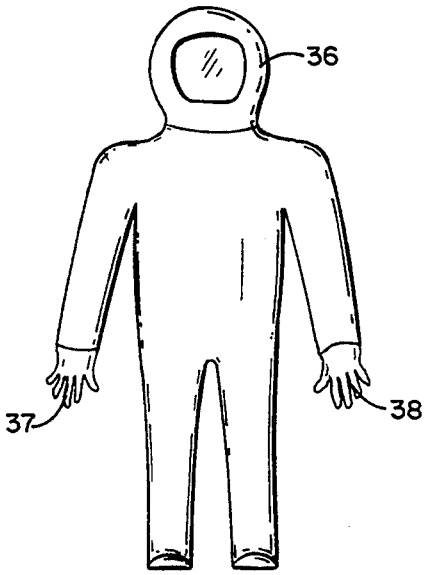

(PRIOR ART)

FIG. 1d