April 10, 1962 A. W. ANDERBERG ETAL 3,028,621

WINDOW MOUNTING DEVICE

Filed March 9, 1960

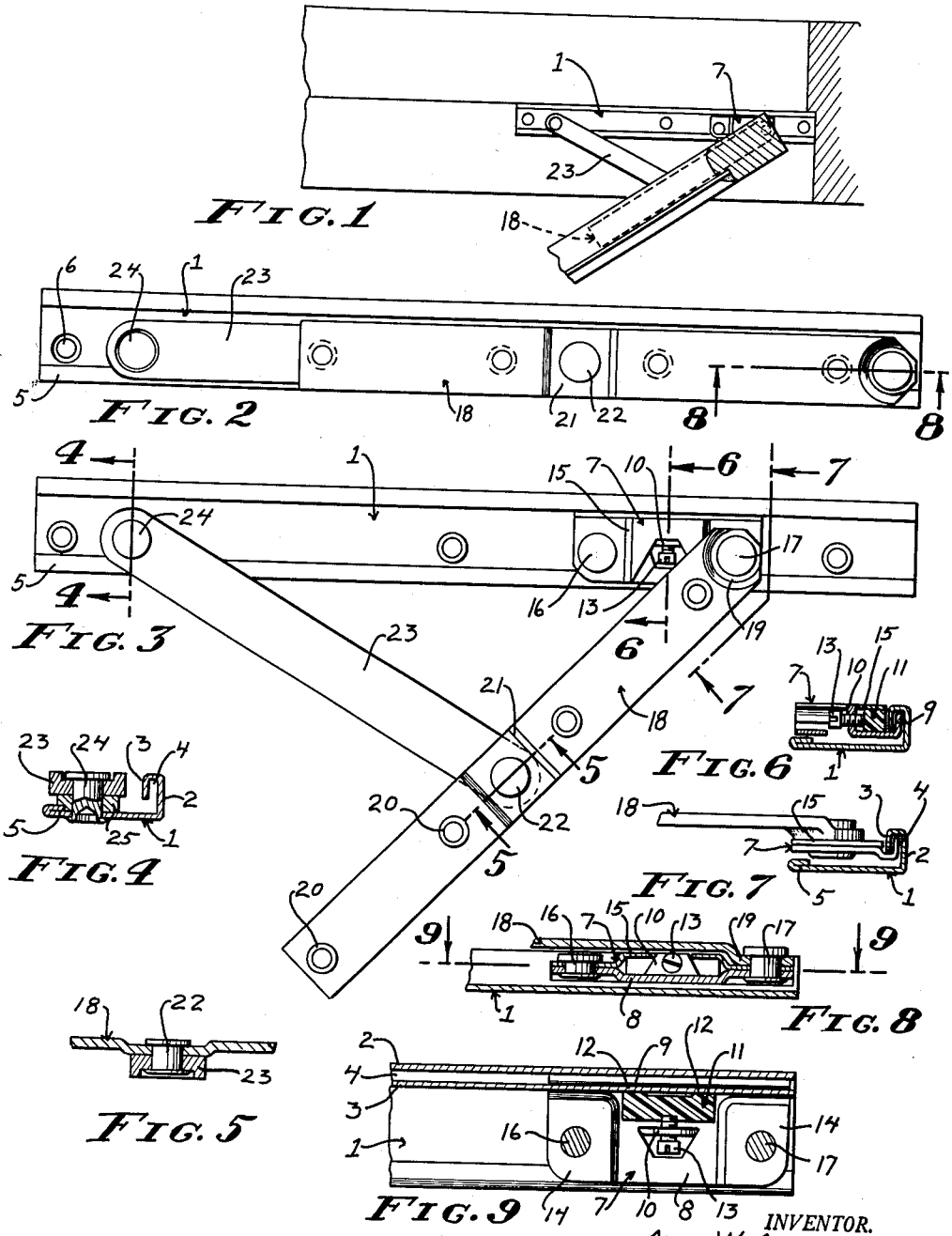


INVENTOR.
AXEL W. ANDERBERG
BY WILBUR F. BLAKEMORE
Lyon & Lyon
ATTORNEYS