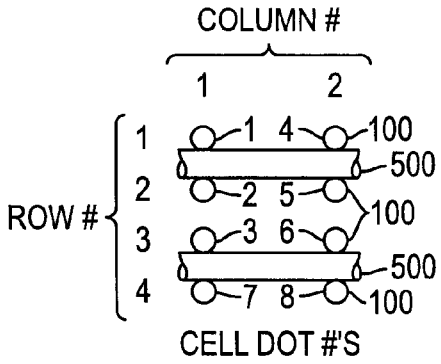
COLUMN #
1
2
ROW #
1
2
3
4
1 4
100
500
2 5
100
3 6
500
7 8
100
CELL DOT #'S

FIG. 1A

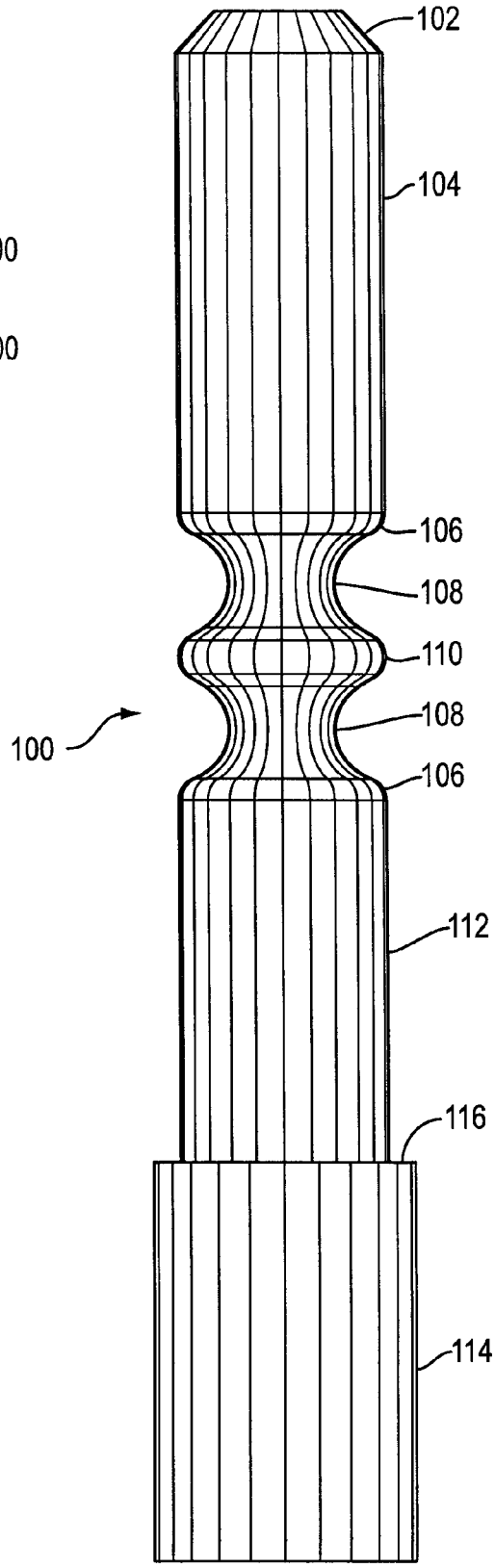
102
104
106
108
110
108
106
100
112
116
114

FIG. 1B