US009410521B2

(12) **United States Patent**
Yi et al.

(10) **Patent No.: US 9,410,521 B2**
(45) **Date of Patent: Aug. 9, 2016**

(54) **FUEL INJECTOR SPRAY PATTERN**

(71) Applicant: **Ford Global Technologies, LLC**, Dearborn, MI (US)

(72) Inventors: **Jianwen James Yi**, West Bloomfield, MI (US); **Claudia Olivia Iyer**, Canton, MI (US); **Steven Wooldridge**, Saline, MI (US); **Gary Alan Coulson**, Ypsilanti, MI (US); **David Bruce Reiche**, Livonia, MI (US); **Brad Alan VanDerWege**, Plymouth, MI (US)

(73) Assignee: **Ford Global Technologies, LLC**, Dearborn, MI (US)

(*) Notice: Subject to any disclaimer, the term of this patent is extended or adjusted under 35 U.S.C. 154(b) by 108 days.

(21) Appl. No.: **13/946,740**

(22) Filed: **Jul. 19, 2013**

(65) **Prior Publication Data**

US 2015/0020768 A1 Jan. 22, 2015

(51) **Int. Cl.**

F02B 5/00	(2006.01)
F02B 3/00	(2006.01)
F02B 17/00	(2006.01)
F02M 61/18	(2006.01)
F02B 23/10	(2006.01)
F02B 75/12	(2006.01)

(52) **U.S. Cl.**

CPC ***F02M 61/1806*** (2013.01); ***F02B 23/104*** (2013.01); ***F02B 23/105*** (2013.01); *F02B 2023/103* (2013.01); *F02B 2075/125* (2013.01); *Y02T 10/123* (2013.01); *Y02T 10/125* (2013.01)

(58) **Field of Classification Search**

USPC 123/302, 305, 295, 299

See application file for complete search history.

(56) **References Cited**

U.S. PATENT DOCUMENTS

6,659,075	B1 *	12/2003	Tokuyasu	F02B 17/005 123/301
7,104,250	B1	9/2006	Yi et al.	
7,418,940	B1 *	9/2008	Yi	F02B 17/005 123/295
8,347,853	B2	1/2013	Xu et al.	
2004/0020459	A1 *	2/2004	Arndt et al.	123/305
2011/0162621	A1 *	7/2011	Xu	F02B 23/104 123/305
2011/0277727	A1	11/2011	Hay et al.	

* cited by examiner

Primary Examiner — Lindsay Low
Assistant Examiner — Syed O Hasan
(74) *Attorney, Agent, or Firm* — Julia Voutyras; Alleman Hall McCoy Russell & Tuttle LLP

(57) **ABSTRACT**

A fuel injector having an injector axis, comprising a first nozzle aiming in a first radial direction; a first nozzle pair aiming in radial directions each equally angled relative to the first direction, closest to the first radial direction, and having a longest radial offset; a nozzle second pair in radial directions each equally angled relative to the first direction; and another nozzle aiming opposite the first radial direction and having a shortest radial offset.
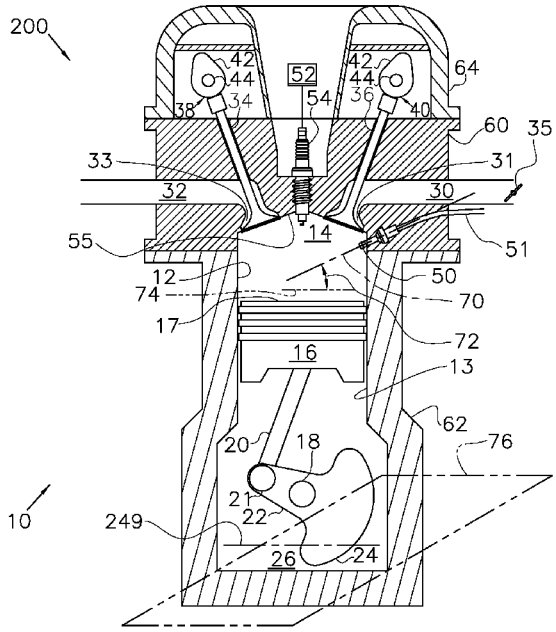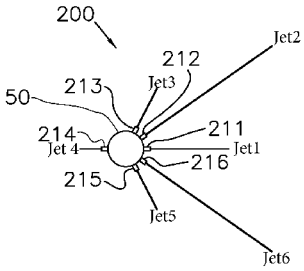
19 Claims, 3 Drawing Sheets