US009408521B2

(12) **United States Patent**
Molinet et al.

(10) **Patent No.: US 9,408,521 B2**
(45) **Date of Patent: Aug. 9, 2016**

(54) **CONTINUOUSLY CURVING CLEANING ELEMENT**

(71) Applicant: **3M INNOVATIVE PROPERTIES COMPANY**, St. Paul, MN (US)

(72) Inventors: **Michael C. Molinet**, Stanford, CA (US); **Trevor Chipman**, Minneapolis, MN (US); **Jeffrey S. Fox**, White Bear Township, MN (US); **Kayo M. Roehm**, Shoreview, MN (US); **Cynthia A. Timmerman**, Hudson, WI (US); **Martin E. Broen**, Milan (IT); **Johannes Bayer**, Balgach (CH)

(73) Assignee: **3M Innovative Properties Company**, St. Paul, MN (US)

(*) Notice: Subject to any disclaimer, the term of this patent is extended or adjusted under 35 U.S.C. 154(b) by 516 days.

(21) Appl. No.: **13/785,042**

(22) Filed: **Mar. 5, 2013**

(65) **Prior Publication Data**

US 2014/0013527 A1 Jan. 16, 2014

Related U.S. Application Data

(60) Provisional application No. 61/669,899, filed on Jul. 10, 2012.

(51) **Int. Cl.**
A47L 17/00 (2006.01)
A47L 17/08 (2006.01)

(52) **U.S. Cl.**
CPC ***A47L 17/00*** (2013.01); ***A47L 17/08*** (2013.01); *Y10T 29/49826* (2015.01)

(58) **Field of Classification Search**
CPC A47L 13/16; A47L 13/17; A47L 13/253; A47L 13/258; A47L 17/00; A47L 17/04; A47L 17/08; A45B 5/002; A45B 5/0041; A45B 5/0045
USPC 401/9, 261
See application file for complete search history.

(56) **References Cited**

U.S. PATENT DOCUMENTS

3,713,744	A *	1/1973	Sims	A47L 13/22 15/144.2
6,010,268	A	1/2000	Sereg	
7,040,830	B2	5/2006	Kliegman	
D554,314	S	10/2007	Kubes	
2003/0229958	A1	12/2003	Thompson	
2004/0019995	A1	2/2004	Kowalski	
2006/0085935	A1 *	4/2006	White	15/228
2006/0200929	A1	9/2006	Knopow	

(Continued)

FOREIGN PATENT DOCUMENTS

NL 8 202 730 2/1984

OTHER PUBLICATIONS

PCT International Search Report for PCT/US2013/049718 mailed Sep. 30, 2013.
Quickie Mfg—Lysol Scrub Dishwand 57161. Photo. Online. Apr. 3, 2013 <www.midlandhardware.com/zoomify.asp?catalogid=215066&img=/assets/images/products/137286.jpg>.

(Continued)

Primary Examiner — Mark A Laurenzi
Assistant Examiner — Bradley Oliver

(57) **ABSTRACT**

The disclosed cleaning element, which may be secured to a cleaning tool, includes a cleaning material that continuously curves from a first working surface to a second working surface allowing for easy cleaning of sharply curving surface, such as, for example, bowls and cups. Also disclosed is a method of making a continuously curving cleaning element.
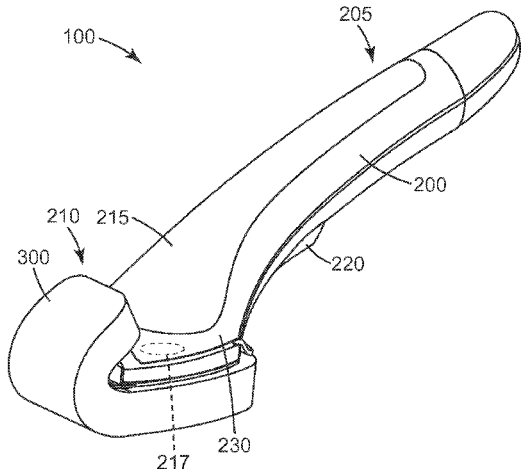
18 Claims, 2 Drawing Sheets