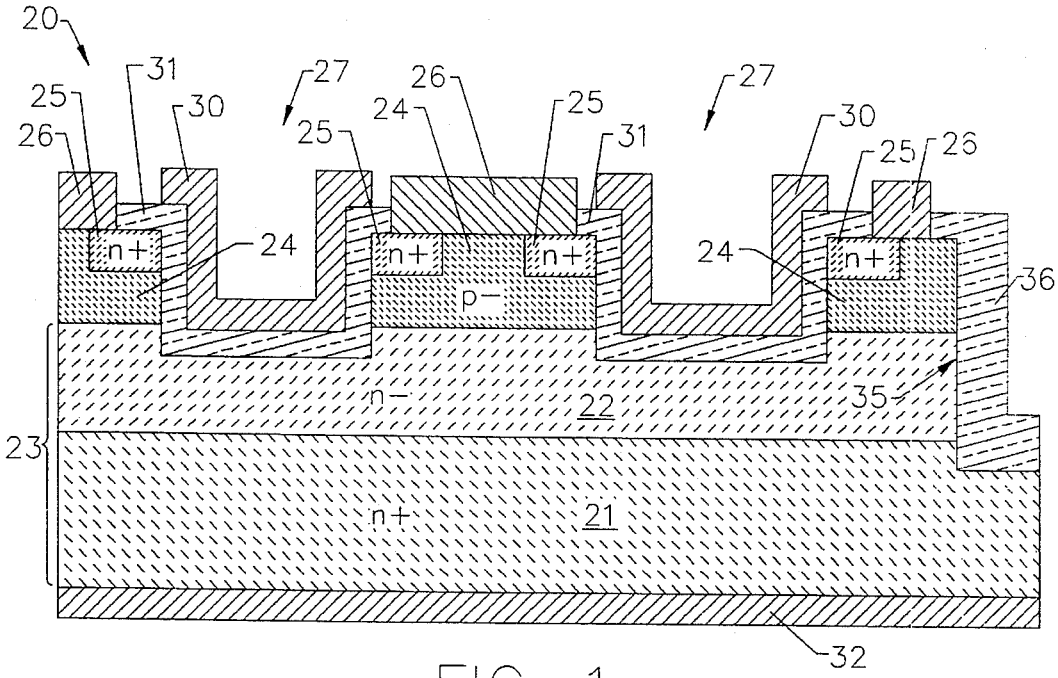
20
31
27
26
27
25
30
24
25
31
30
25
26
26
25
n+
24
n+
n+
24
n+
36
p−
n−
22
35
23
n+
21
32

FIG. 1.

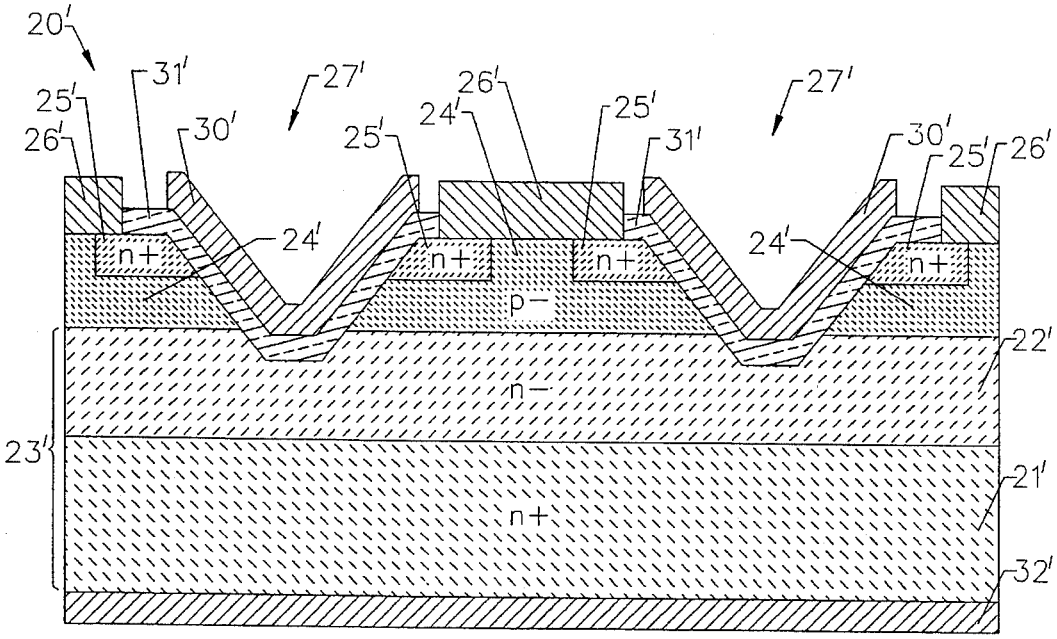
20'
31'
27'
26'
27'
25'
30'
24'
25'
31'
30'
25'
26'
26'
25'
n+
24'
n+
n+
24'
n+
p−
22'
n−
23'
21'
n+
32'

FIG. 2.