US007799120B2

(12) **United States Patent**
**Yaghi et al.**

(10) **Patent No.: US 7,799,120 B2**
(45) **Date of Patent: Sep. 21, 2010**

(54) **METAL-ORGANIC FRAMEWORKS WITH EXCEPTIONALLY HIGH CAPACITY FOR STORAGE OF CARBON DIOXIDE AT ROOM-TEMPERATURE**

(75) Inventors: **Omar M. Yaghi**, Los Angeles, CA (US); **Andrew Robert Millward**, Longmont, CO (US)

(73) Assignee: **The Regents of the University of Michigan**, Ann Arbor, MI (US)

( * ) Notice: Subject to any disclaimer, the term of this patent is extended or adjusted under 35 U.S.C. 154(b) by 752 days.

(21) Appl. No.: **11/527,232**

(22) Filed: **Sep. 26, 2006**

(65) **Prior Publication Data**

US 2007/0068389 A1 Mar. 29, 2007

**Related U.S. Application Data**

(60) Provisional application No. 60/720,439, filed on Sep. 26, 2005.

(51) **Int. Cl.**
***B01D 53/02*** (2006.01)

(52) **U.S. Cl.** ..... **96/148**; 96/108; 96/147; 95/90; 95/91; 95/92; 95/148; 95/903; 423/230; 206/0.7; 252/184

(58) **Field of Classification Search** ..... 96/108–154; 95/90–148, 900–903; 502/401; 206/0.7; 252/184; 423/230
See application file for complete search history.

(56) **References Cited**

U.S. PATENT DOCUMENTS

3,144,418 A 8/1964 Hill et al.
4,359,327 A 11/1982 Armand et al.
5,629,523 A 5/1997 Ngo et al.
5,648,508 A 7/1997 Yaghi
RE35,908 E 9/1998 Kitaguchi et al.
5,862,796 A 1/1999 Seki et al.
5,880,471 A 3/1999 Schelten et al.
5,940,460 A 8/1999 Seidel et al.
6,072,181 A 6/2000 Hassard et al.
6,113,673 A 9/2000 Loutfy et al.
6,309,446 B1 * 10/2001 Nakanoya et al. ..... 95/102

(Continued)

FOREIGN PATENT DOCUMENTS

CA 2 387 122 2/2001

(Continued)

OTHER PUBLICATIONS

U.S. Appl. No. 10/270,642, filed Oct. 16, 2002, Mueller et al.

(Continued)

*Primary Examiner*—Jason M Greene
*Assistant Examiner*—Dung Bui
(74) *Attorney, Agent, or Firm*—Brooks Kushman P.C.

(57) **ABSTRACT**

A carbon dioxide storage system includes a container and a conduit attached to the container for introducing or removing a carbon dioxide-containing composition from the container. A carbon dioxide storage material is positioned within the container. The carbon dioxide-storage material includes a metal-organic framework, which has a sufficient surface area to store at least 10 carbon dioxide molecules per formula unit of the metal-organic framework at a temperature of about 25° C.
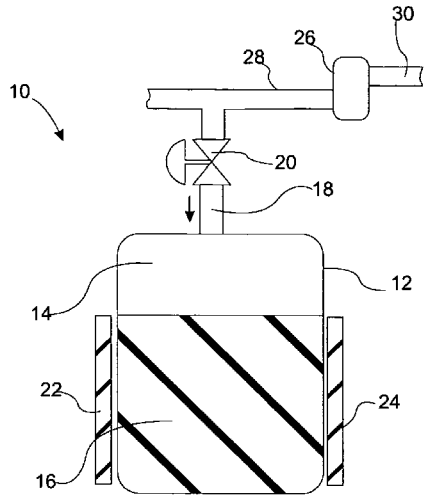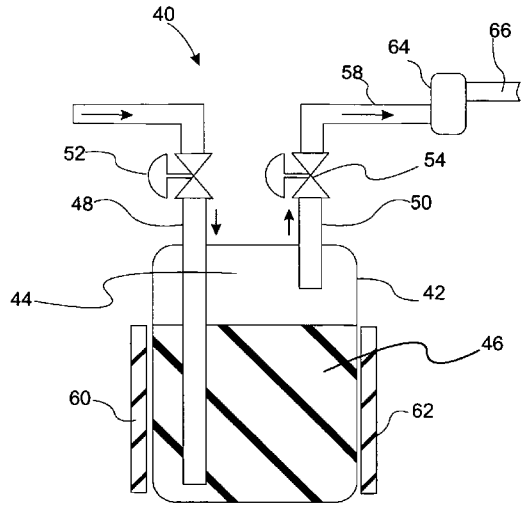
**23 Claims, 8 Drawing Sheets**