US006799020B1

(12) **United States Patent**
**Heidmann et al.**

(10) **Patent No.: US 6,799,020 B1**
(45) **Date of Patent: Sep. 28, 2004**

(54) **PARALLEL AMPLIFIER ARCHITECTURE USING DIGITAL PHASE CONTROL TECHNIQUES**

(75) Inventors: **Peter D. Heidmann**, Carlsbad, CA (US); **Joseph P. Burke**, Carlsbad, CA (US)

(73) Assignee: **Qualcomm Incorporated**, San Diego, CA (US)

( * ) Notice: Subject to any disclaimer, the term of this patent is extended or adjusted under 35 U.S.C. 154(b) by 0 days.

(21) Appl. No.: **09/357,695**

(22) Filed: **Jul. 20, 1999**

(51) **Int. Cl.**[7] ..... **H04B 1/04**

(52) **U.S. Cl.** ..... **455/103**; 455/115.1; 330/107; 330/124 R; 330/295; 375/295

(58) **Field of Search** ..... 455/103, 104, 455/105, 115, 126, 91, 313; 330/107, 124 R, 295; 375/295, 297; 331/1 A; 342/372

(56) **References Cited**

U.S. PATENT DOCUMENTS

| | | | | |
|---|---|---|---|---|
| 5,184,093 A | | 2/1993 | Itoh et al. | 331/25 |
| 5,222,246 A | | 6/1993 | Wolkstein | 455/13.4 |
| 5,256,987 A | * | 10/1993 | Kibayashi et al. | 330/295 |
| 5,381,116 A | * | 1/1995 | Nuckolls et al. | 331/1 A |
| 5,708,681 A | | 1/1998 | Malkemes et al. | |
| 5,754,597 A | * | 5/1998 | Lurey et al. | 375/295 |
| 5,867,060 A | | 2/1999 | Burkett, Jr. et al. | |
| 5,872,481 A | | 2/1999 | Sevic et al. | |
| 5,884,143 A | * | 3/1999 | Wolkstein et al. | 455/126 X |
| 6,046,649 A | * | 4/2000 | Lange | 375/297 X |
| 6,054,948 A | * | 4/2000 | Dean | 342/372 |
| 6,321,075 B1 | * | 11/2001 | Butterfield | 455/313 |

FOREIGN PATENT DOCUMENTS

EP 0473299 3/1992

OTHER PUBLICATIONS

R. Kohl, et al., "*Pamela—Linearized Solid State Power Amplifier at Ku–Band Frequency*," Proceedings of the European Microwave Conference, GB, Tunbridge Wells, Reed Exhibition Company, Sep. 6, 1993, pp. 443–445.

R. Kohl, et al., "*Pamela—A new Method for Linear and Efficient Power Amplification*" Proceedings of the European Microwave Conference, GB, Tunbridge Wells, MEP, vol. Conf. 20, Sep. 10, 1990, pp. 310–315.

* cited by examiner

*Primary Examiner*—Nay Maung
*Assistant Examiner*—Philip J. Sobutka
(74) *Attorney, Agent, or Firm*—Russell B. Miller; Christopher Edwards

(57) **ABSTRACT**

An improved method and apparatus for using parallel amplifiers to efficiently amplify an information signal are disclosed. The improved apparatus utilizes digital signal manipulation techniques in optimizing the phase of the upconverted input signals provided to each of the parallel amplifiers. The phase and amplitude of the input signals are adjusted such that the power measured at the output of a combiner is maximized as compared to the sum of the power of combiner input signals.
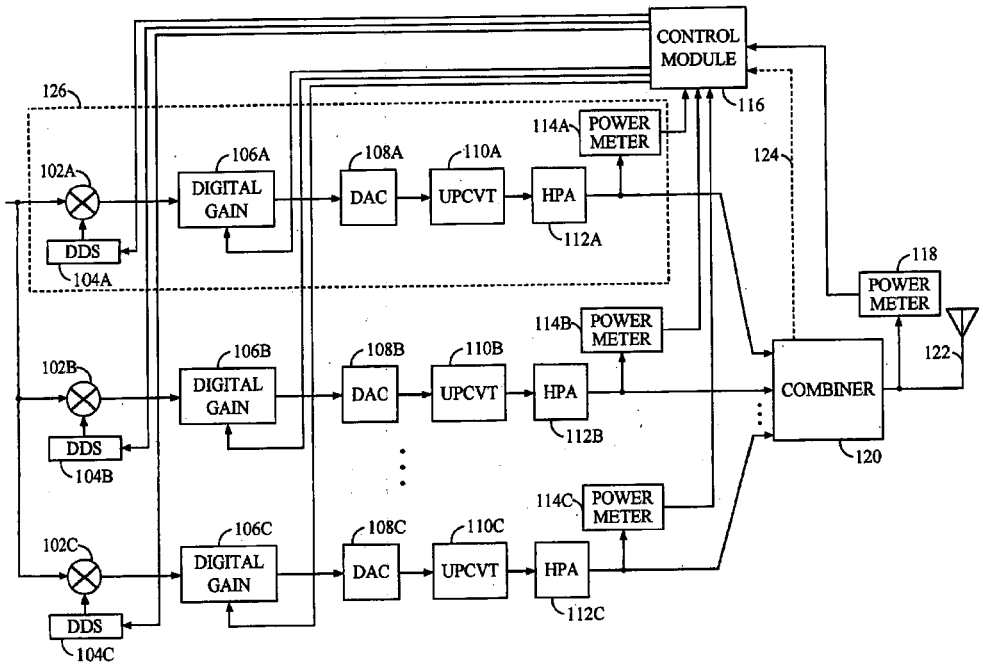
**56 Claims, 5 Drawing Sheets**