US007198620B2

(12) **United States Patent**
Greydanus et al.

(10) **Patent No.: US 7,198,620 B2**
(45) **Date of Patent: Apr. 3, 2007**

(54) **ONE STAGE SALINE LOCK AND INTRAVENOUS CATHETER SET AND METHOD OF USE**

(75) Inventors: **Dominique J. Greydanus**, Fort Sam Houston, TX (US); **John Kennedy**, Boeblingen (DE); **John B. Holcomb**, San Antonio, TX (US); **Robert Miller**, Simpsonville, SC (US)

(73) Assignee: **The United States of America as represented by the Secretary of the Army**, Washington, DC (US)

(*) Notice: Subject to any disclaimer, the term of this patent is extended or adjusted under 35 U.S.C. 154(b) by 0 days.

(21) Appl. No.: **10/986,810**

(22) Filed: **Nov. 15, 2004**

(65) **Prior Publication Data**

US 2005/0197635 A1 Sep. 8, 2005

Related U.S. Application Data

(60) Provisional application No. 60/519,330, filed on Nov. 13, 2003.

(51) **Int. Cl.**
A61M 25/00 (2006.01)

(52) **U.S. Cl.** **604/284**

(58) **Field of Classification Search** 604/82, 604/158, 164, 165, 166.01, 167, 284, 264, 604/523

See application file for complete search history.

(56) **References Cited**

U.S. PATENT DOCUMENTS

4,099,528 A * 7/1978 Sorenson et al. 604/44
4,333,455 A * 6/1982 Bodicky 604/158
4,585,435 A * 4/1986 Vaillancourt 604/518
4,798,605 A 1/1989 Steiner et al.
4,998,927 A 3/1991 Vaillancourt
5,071,405 A * 12/1991 Piontek et al. 604/103.03
5,098,410 A * 3/1992 Kerby et al. 604/256
5,236,417 A * 8/1993 Wallis 604/82
5,254,097 A * 10/1993 Schock et al. 604/167.04
5,290,244 A * 3/1994 Moonka 604/164.13
5,358,490 A * 10/1994 Henry et al. 604/167.03
5,509,908 A * 4/1996 Hillstead et al. 604/264
5,591,137 A 1/1997 Stevens
5,749,857 A 5/1998 Cuppy
5,810,793 A * 9/1998 Boettger 604/284
5,911,710 A 6/1999 Barry et al.
6,331,176 B1 12/2001 Becker et al.
6,533,759 B1 3/2003 Watson et al.
6,569,125 B2 5/2003 Jepson et al.
6,572,593 B1 6/2003 Daum
6,921,391 B1 * 7/2005 Barker et al. 604/284

* cited by examiner

Primary Examiner—Manuel Mendez
(74) *Attorney, Agent, or Firm*—Elizabeth Arwine

(57) **ABSTRACT**

The invention is a saline lock and intravenous catheter combination that is simple to use. The device preferably includes a hub and a catheter with the hub having a first port and a second port. A further embodiment provides a needle in communication with the device. The invention also includes a method for using the device in combination with a needle.
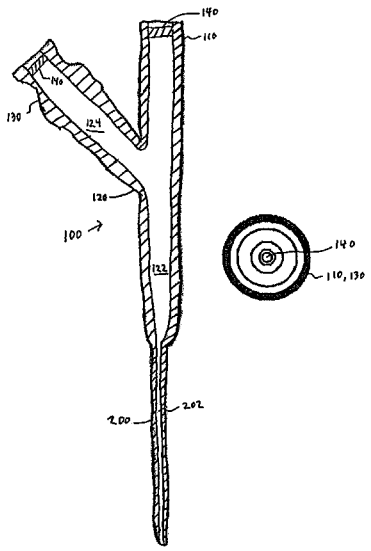
15 Claims, 1 Drawing Sheet