Oct. 26, 1954 C. D. ALWAY ET AL 2,692,820

METHOD AND MEANS FOR EFFECTING AUTOMATIC FRACTIONATION

Filed Oct. 28, 1950 10 Sheets-Sheet 2

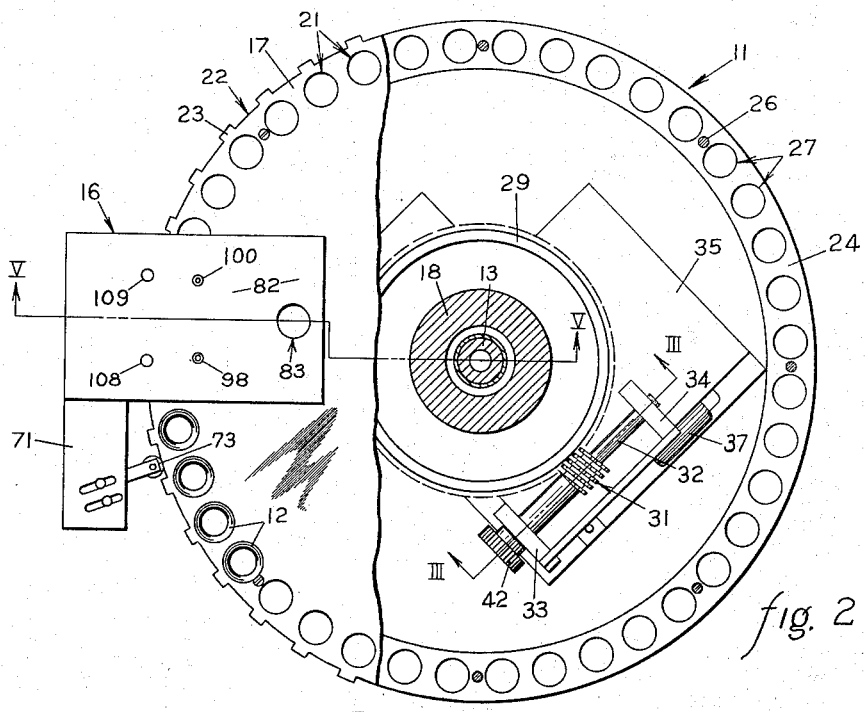

fig. 2

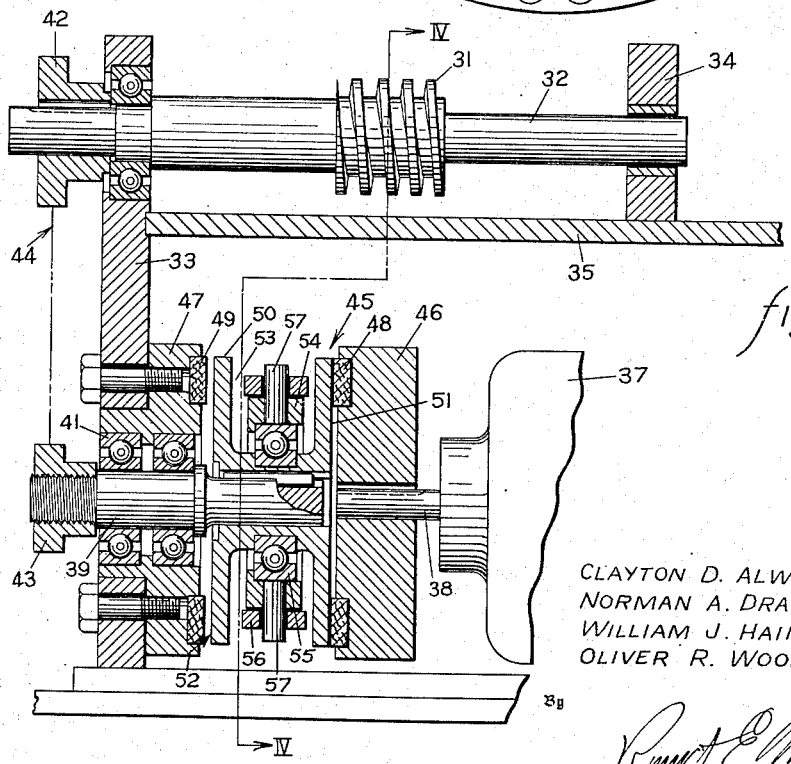

fig. 3

CLAYTON D. ALWAY
NORMAN A. DRAKE
WILLIAM J. HAINES
OLIVER R. WOODS
Inventors

By

Attorney