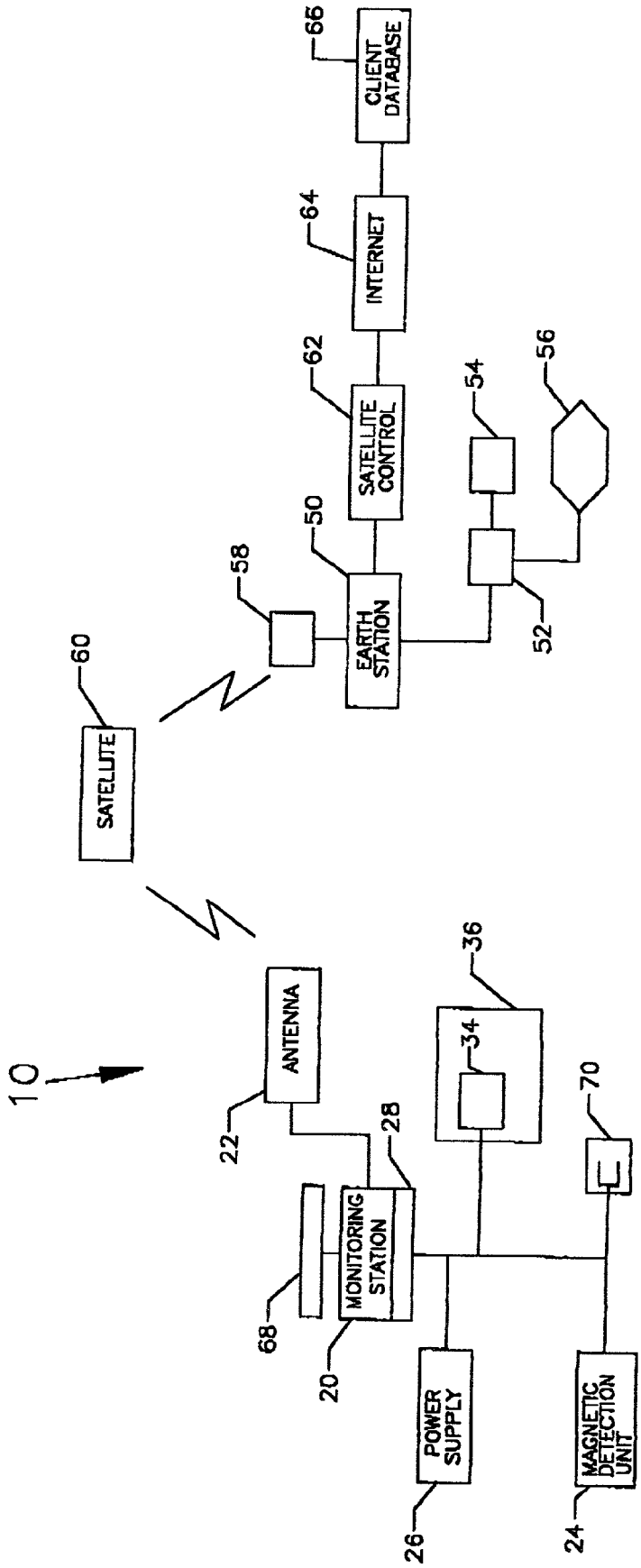
10
SATELLITE
60
58
EARTH STATION
50
SATELLITE CONTROL
62
INTERNET
64
CLIENT DATABASE
66
54
56
52
ANTENNA
22
MONITORING STATION
28
68
20
POWER SUPPLY
26
36
34
70
MAGNETIC DETECTION UNIT
24

FIG. 1