OR 4,061,420 E

X 4085N

X 4086D

United State

Kaprelian et al.

1] 4,061,420

5] Dec. 6, 1977

[54] **CATADIOPTRIC LENS SYSTEM**

[75] Inventors: **Edward K. Kaprelian**, Mendham; **William E. Mimmack**, Morristown, both of N.J.

[73] Assignee: **Questar Corporation**, New Hope, Pa.

[21] Appl. No.: **683,834**

[22] Filed: **May 6, 1976**

[51] **Int. Cl.**[2] **G02B 17/08**

[52] **U.S. Cl.** **350/199**; 350/200; 350/201

[58] **Field of Search** 350/199, 200, 201

[56] **References Cited**

U.S. PATENT DOCUMENTS

2,701,983	2/1955	Back et al.	350/199
3,490,831	1/1970	Takahashi	350/201

FOREIGN PATENT DOCUMENTS

1,068,028	5/1967	United Kingdom	350/200

Primary Examiner—Paul A. Sacher

Attorney, Agent, or Firm—Denny and Patane

[57] **ABSTRACT**

The invention provides a highly corrected catadioptric telephoto lens comprising in succession, from the long conjugate end, an aspherized negative meniscus corrector plate, a Mangin type primary mirror which directs light to a secondary mirror comprising the central portion of the second surface of the corrector lens, a first positive meniscus corrector lens and a second biconcave corrector lens. The relative aperture is f/8 and the overall length of the system from first vertex to image plane is less than 0.4 focal length.
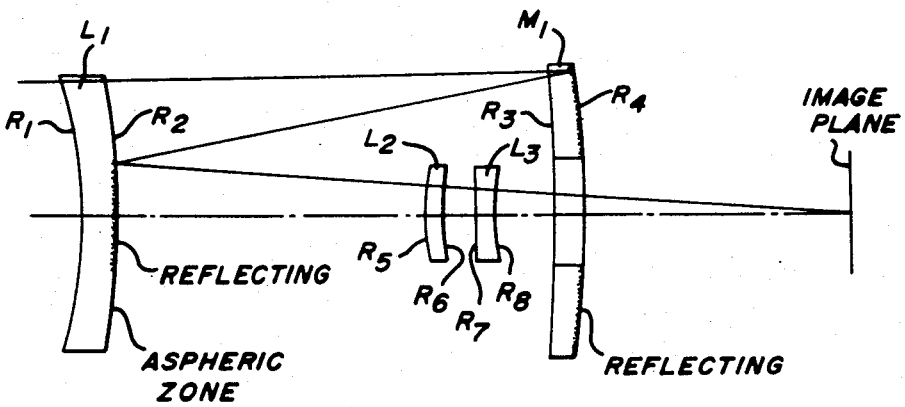
9 Claims, 4 Drawing Figures