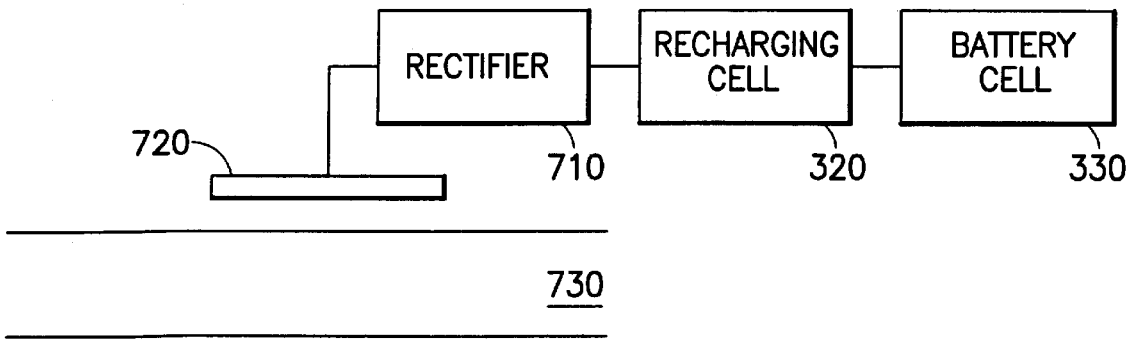
RECTIFIER
RECHARGING CELL
BATTERY CELL
720
710
320
330
730

FIG.7

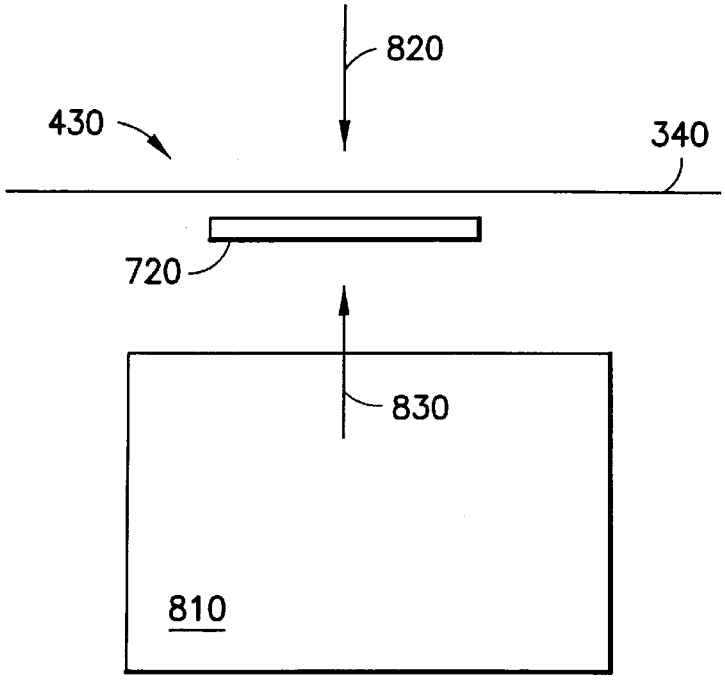
820
430
340
720
830
810

FIG.8