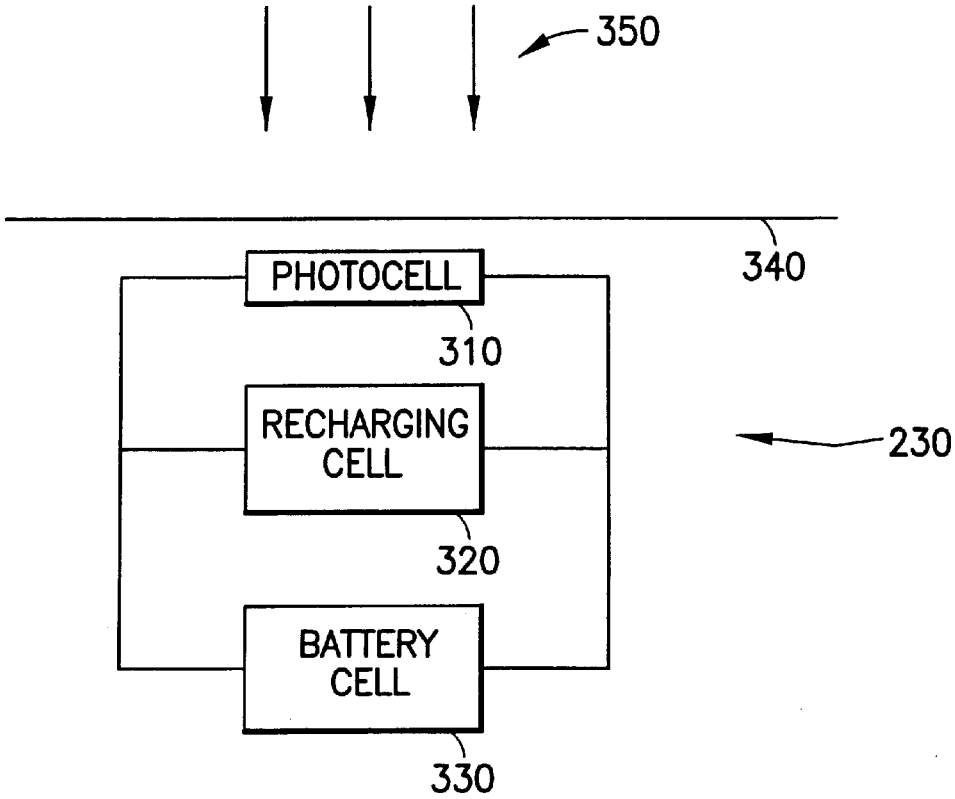
350
340
PHOTOCELL
310
RECHARGING CELL
320
BATTERY CELL
330
230

FIG.3

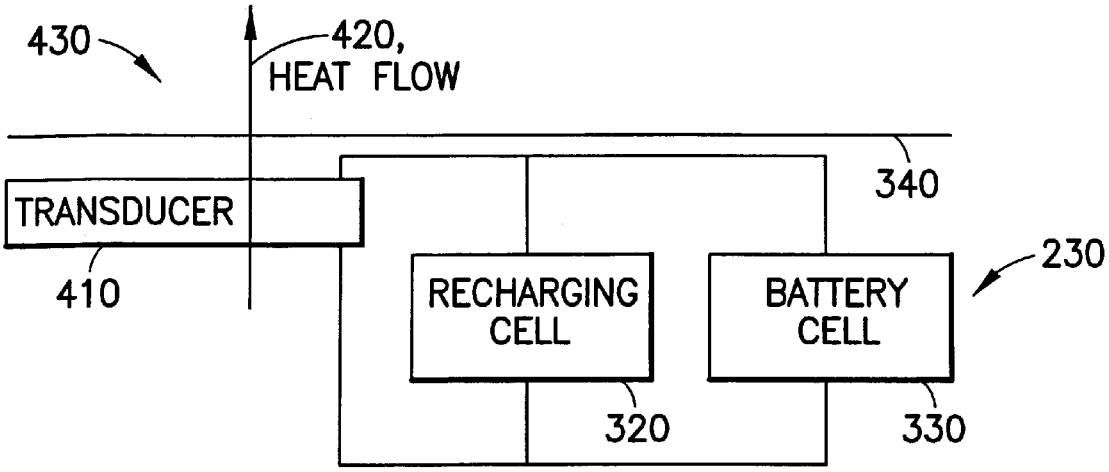
430
420,
HEAT FLOW
340
TRANSDUCER
410
RECHARGING CELL
320
BATTERY CELL
330
230

FIG.4