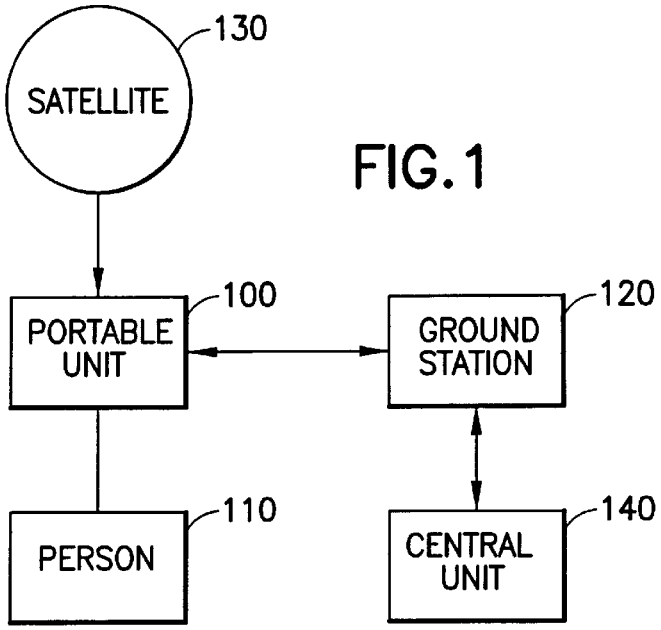
SATELLITE
130
PORTABLE UNIT
100
GROUND STATION
120
PERSON
110
CENTRAL UNIT
140

FIG. 1

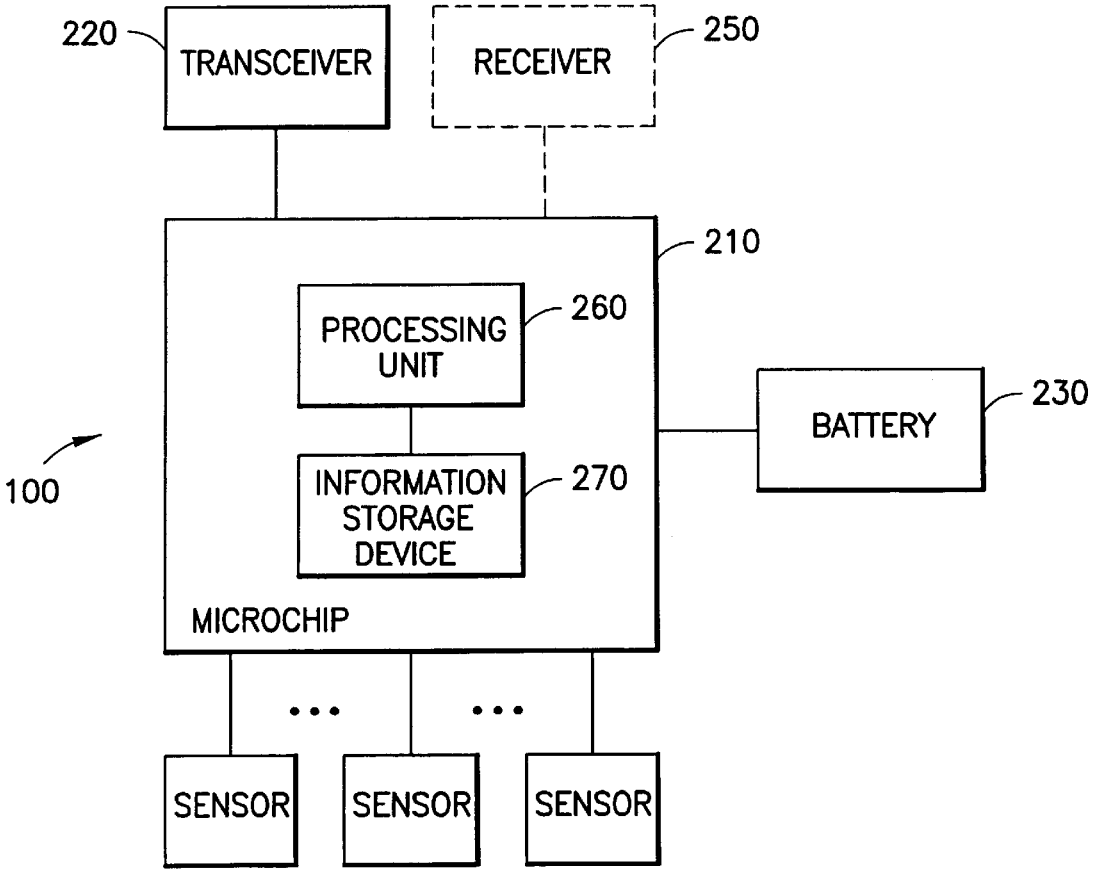
220
TRANSCEIVER
RECEIVER
250
210
PROCESSING UNIT
260
BATTERY
230
100
INFORMATION STORAGE DEVICE
270
MICROCHIP
SENSOR
SENSOR
SENSOR
240

FIG. 2