11/19/85 OR 4,553,820

United States Patent [19]

Harada

[11] **Patent Number: 4,553,820**

[45] **Date of Patent: Nov. 19, 1985**

[54] **KEYBOARD SWITCH WITH A MESH OF FIBERS**

[75] Inventor: **Yuji Harada,** Tokyo, Japan

[73] Assignee: **Canon Kabushiki Kaisha,** Tokyo, Japan

[21] Appl. No.: **517,631**

[22] Filed: **Jul. 27, 1983**

[30] **Foreign Application Priority Data**

Aug. 13, 1982 [JP] Japan 57-140672

[51] **Int. Cl.**[4] **G02F 1/133**

[52] **U.S. Cl.** ..... **350/331 R;** 350/276 R; 350/339 D

[58] **Field of Search** ..... 350/345, 334, 337, 339 D, 350/339 R, 338, 331 R, 276 R; 400/479, 490, 494; 340/712, 765, 785

[56] **References Cited**

U.S. PATENT DOCUMENTS

3,736,047	5/1973	Gelber et al.	350/338
4,017,848	4/1977	Tannas	350/334 X
4,105,292	8/1978	Conder et al.	350/334 X
4,264,147	4/1981	Baur et al.	350/339 D X
4,398,804	8/1983	Yokoi	350/337
4,415,236	11/1983	Perregaux	350/339 D X

Primary Examiner—John K. Corbin
Assistant Examiner—David Lewis
Attorney, Agent, or Firm—Fitzpatrick, Cella, Harper & Scinto

[57] **ABSTRACT**

This invention discloses a keyboard switch with display function composed of two transparent sheets constituting a pressure operable switch and placed on a display unit. The upper of two transparent sheets is provided with an unflat top surface for avoiding unnecessary reflection.
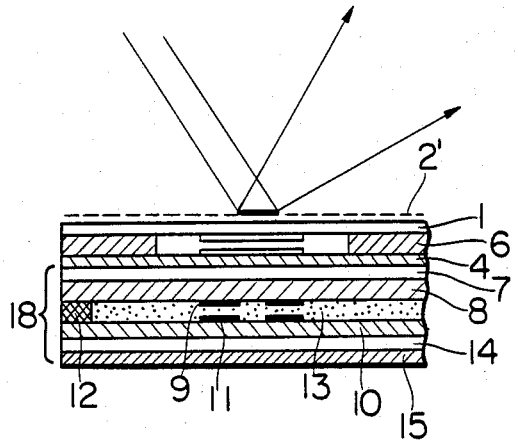
7 Claims, 5 Drawing Figures