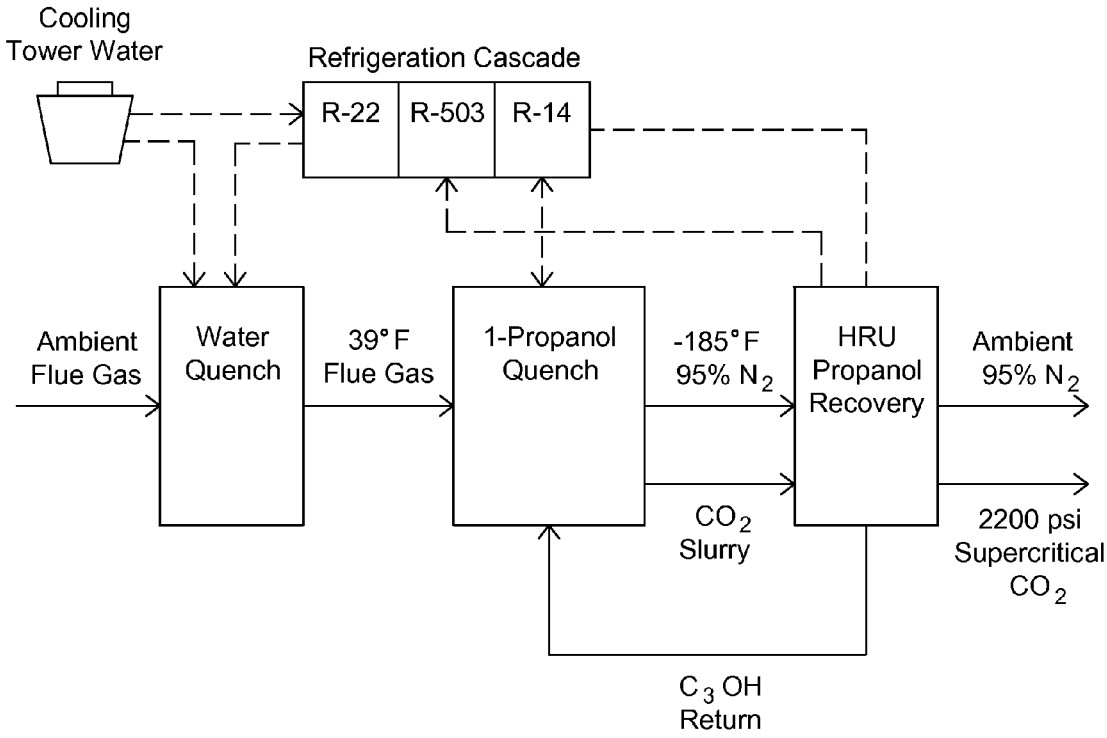
Cooling
Tower Water
Refrigeration Cascade
R-22
R-503
R-14
Ambient
Flue Gas
Water
Quench
39° F
Flue Gas
1-Propanol
Quench
-185° F
95% N2
HRU
Propanol
Recovery
Ambient
95% N2
CO2
Slurry
2200 psi
Supercritical
CO2
C3 OH
Return

Figure 1