US008747520B2

(12) **United States Patent**
Bearden et al.

(10) **Patent No.: US 8,747,520 B2**
(45) **Date of Patent: Jun. 10, 2014**

(54) **CARBON DIOXIDE CAPTURE FROM POWER OR PROCESS PLANT GASES**

(75) Inventors: **Mark D. Bearden**, Richland, WA (US); **Paul H. Humble**, Kennewick, WA (US)

(73) Assignee: **Battelle Memorial Institute**, Richland, WA (US)

(*) Notice: Subject to any disclaimer, the term of this patent is extended or adjusted under 35 U.S.C. 154(b) by 286 days.

(21) Appl. No.: **13/100,135**

(22) Filed: **May 3, 2011**

(65) **Prior Publication Data**

US 2011/0265512 A1 Nov. 3, 2011

Related U.S. Application Data

(60) Provisional application No. 61/330,709, filed on May 3, 2010.

(51) **Int. Cl.**
B01D 53/02 (2006.01)
B01D 53/14 (2006.01)

(52) **U.S. Cl.**
USPC **95/41**; 95/42; 95/92; 95/94; 95/117; 95/139; 95/231; 95/236

(58) **Field of Classification Search**
USPC 95/210, 211, 228, 230, 236, 232, 233, 95/234, 235, 149; 96/290, 295, 270, 271, 96/273, 277, 322
See application file for complete search history.

(56) **References Cited**

U.S. PATENT DOCUMENTS

4,369,167 A * 1/1983 Weir, Jr. 423/210
2004/0242826 A1* 12/2004 Nishimura 526/317.1
2007/0277674 A1* 12/2007 Hirano et al. 95/290
2008/0173585 A1* 7/2008 White et al. 210/656
2009/0013717 A1* 1/2009 Darde et al. 62/617
2009/0202410 A1* 8/2009 Kawatra et al. 423/232
2009/0266107 A1* 10/2009 Singh et al. 62/617
2011/0173981 A1* 7/2011 Dube et al. 60/651
2011/0207002 A1* 8/2011 Powell et al. 429/410
2011/0247360 A1* 10/2011 Hasse et al. 62/606

FOREIGN PATENT DOCUMENTS

WO 2007140261 A2 12/2007
WO 2009047341 A1 4/2009
WO 2009070785 A2 6/2009
WO WO 2009121008 A2 * 10/2009 ..... F01K 23/06

OTHER PUBLICATIONS

International Search Report and Written Opinion for International Application No. PCT/US2011/035037, International Filing Date May 3, 2011, Date of Mailing Jan. 4, 2012.

* cited by examiner

Primary Examiner — Duane Smith
Assistant Examiner — Cabrena Holecek
(74) *Attorney, Agent, or Firm* — A. J. Gokcek; Derek H. Maughan

(57) **ABSTRACT**

The present invention are methods for removing preselected substances from a mixed flue gas stream characterized by cooling said mixed flue gas by direct contact with a quench liquid to condense at least one preselected substance and form a cooled flue gas without substantial ice formation on a heat exchanger. After cooling additional process methods utilizing a cryogenic approach and physical concentration and separation or pressurization and sorbent capture may be utilized to selectively remove these materials from the mixed flue gas resulting in a clean flue gas.
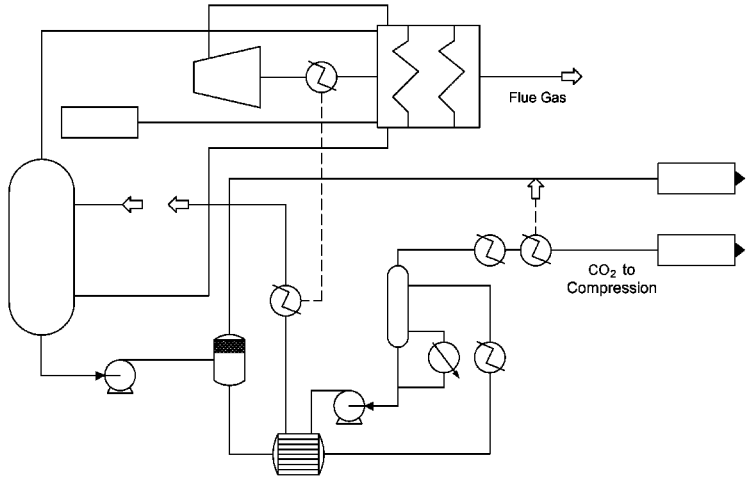
7 Claims, 6 Drawing Sheets