A. SEMMENDINGER.

Photographic Plate-Holders.

No. 145,020. Patented Nov. 25, 1873.

Fig. 1.

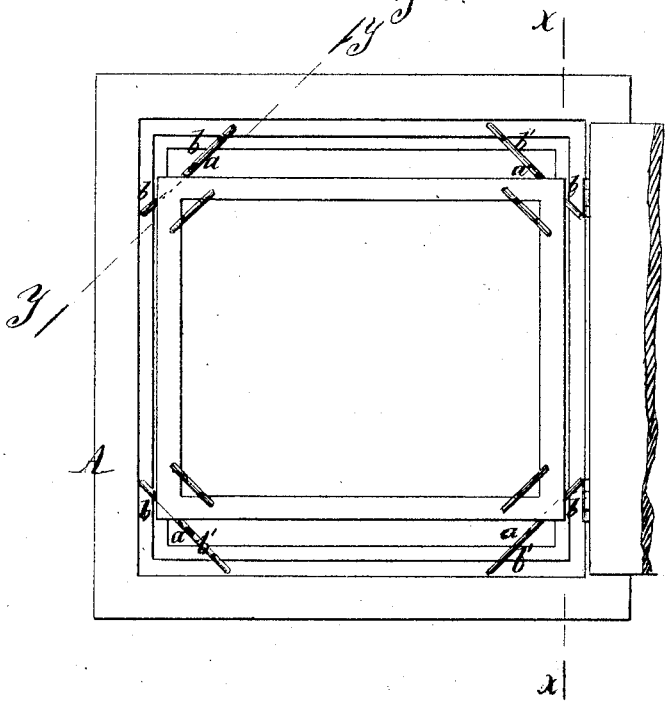

Fig. 2

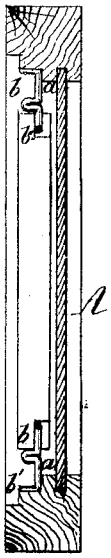

Fig. 3

A. H. Norrie.
W. T. Hutchinson

A. Semmendinger
By Van Santvoord & Hauff.
Attys.

AM. PHOTO-LITHOGRAPHIC Co. N.Y. (OSBORNE'S PROCESS)