US009638420B2

(12) **United States Patent**
Li

(10) **Patent No.: US 9,638,420 B2**
(45) **Date of Patent: May 2, 2017**

(54) **CYCLONE IGNITION GUN**

(71) Applicant: **Yi-Jue Li**, Taipei (TW)

(72) Inventor: **Yi-Jue Li**, Taipei (TW)

(*) Notice: Subject to any disclaimer, the term of this patent is extended or adjusted under 35 U.S.C. 154(b) by 296 days.

(21) Appl. No.: **14/530,755**

(22) Filed: **Nov. 2, 2014**

(65) **Prior Publication Data**

US 2016/0123590 A1 May 5, 2016

(51) **Int. Cl.**
F23Q 13/04 (2006.01)
F23Q 2/16 (2006.01)
F24B 15/00 (2006.01)

(52) **U.S. Cl.**
CPC ***F23Q 13/04*** (2013.01); ***F23Q 2/16*** (2013.01); ***F24B 15/005*** (2013.01)

(58) **Field of Classification Search**
CPC F23Q 13/04
USPC 431/153, 257
See application file for complete search history.

(56) **References Cited**

U.S. PATENT DOCUMENTS

3,545,902 A * 12/1970 Bailey F23D 11/001 431/116
3,949,921 A * 4/1976 Brack B25C 1/085 227/9
5,285,967 A * 2/1994 Weidman B05B 7/205 239/132.1
5,678,494 A * 10/1997 Ulrich F23G 5/027 110/102
6,508,645 B1 * 1/2003 George F23D 14/36 431/187
6,544,210 B1 * 4/2003 Trudel A61B 18/00 604/26
6,983,550 B1 * 1/2006 Lin F23D 14/18 34/96
2005/0029323 A1 * 2/2005 Shima B25C 1/08 227/10
2006/0236557 A1 * 10/2006 Bousfield A45D 20/06 34/96
2008/0230044 A1 * 9/2008 Warner ..... A47J 37/079 126/25 B

* cited by examiner

Primary Examiner — Avinash Savani
(74) *Attorney, Agent, or Firm* — Pai Patent & Trademark Law Firm; Chao-Chang David Pai

(57) **ABSTRACT**

A cyclone ignition gun includes a housing, an igniter, an electric fan, a battery pack, a gas can and a duct pipe respectively mounted inside the housing, a slide switch mounted in the top side of the housing for controlling the operation of the igniter and the electric fan, and a push switch mounted in the bottom side of the housing for controlling the gas can to discharge gas for burning. The slide switch and the push switch can be simultaneously operated to selectively achieve the function of fire burning and air blowing, the function of fire burning, or the function of air blowing.
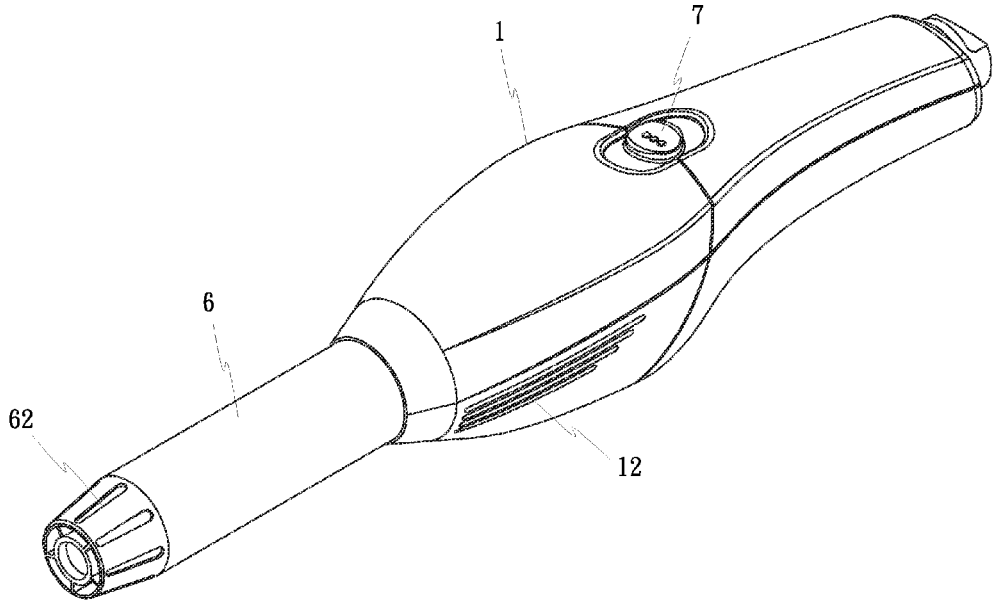
14 Claims, 8 Drawing Sheets