United States Patent [19]

Suzuki et al.

[11] **Patent Number: 4,735,520**

[45] **Date of Patent: Apr. 5, 1988**

[54] **KEY-HOLDING STRUCTURE OF KEYBOARD WITH CURVED OPERATING SURFACE OF KEYS**

[75] Inventors: **Makoto Suzuki; Takeyuki Takagi,** both of Nagoya, Japan

[73] Assignee: **Brother Kogyo Kabushiki Kaisha,** Aichi, Japan

[21] Appl. No.: **75,298**

[22] Filed: **Jul. 17, 1987**

Related U.S. Application Data

[63] Continuation of Ser. No. 770,572, Aug. 29, 1985, abandoned.

[30] **Foreign Application Priority Data**

Sep. 3, 1984 [JP] Japan 59-185201

[51] **Int. Cl.**[4] **B41J 5/10**

[52] **U.S. Cl.** ..... **400/488;** 400/489; 340/365 R

[58] **Field of Search** ..... 400/479.1, 488, 489, 400/496; 340/365 R, 365 C, 365 P

[56] **References Cited**

U.S. PATENT DOCUMENTS

4,196,348	4/1980	Iwakiri et al.	340/365 P X
4,294,555	10/1981	Galaske et al.	400/488
4,363,942	12/1982	Deeg et al.	400/495 X
4,467,150	8/1984	Leitermann et al.	400/488 X
4,528,428	7/1985	Gotoh et al.	400/488 X
4,560,844	12/1985	Takamura et al.	400/488 X

OTHER PUBLICATIONS

Injection Molding of Plastics, Reinhold Pub. Corp., NY, by Thomas, 1947, pp. 302–313.

Primary Examiner—Charles Pearson
Attorney, Agent, or Firm—Parkhurst & Oliff

[57] **ABSTRACT**

A keyboard having a key-holder plate for movably supporting multiple keys of substantially the same shape and size in plural parallel rows, multiple switches disposed so as to correspond to the multiple keys and provide electrical outputs upon depression of the keys at their top faces, an upper casing having an aperture which accommodates upper portions of the keys and allows the keys to be operated, and a lower casing cooperating with the upper casing to enclose the multiple switches. The upper casing and said key-holder plate are integrally molded of a synthetic resin, and the key holder plate includes multiple guide portions which have guide holes for slidably guiding the corresponding keys between their non-operated and operated positions. The guide portions have stopper parts which determine the non-operated positions of the keys. The stopper parts are disposed along a curved reference surface which is slightly curved downwardly in a direction perpendicular to the plural parallel rows of the keys, so that an operating surface of the keys which is generally defined by the top faces is downwardly curved following a curvature of the curved reference surface.
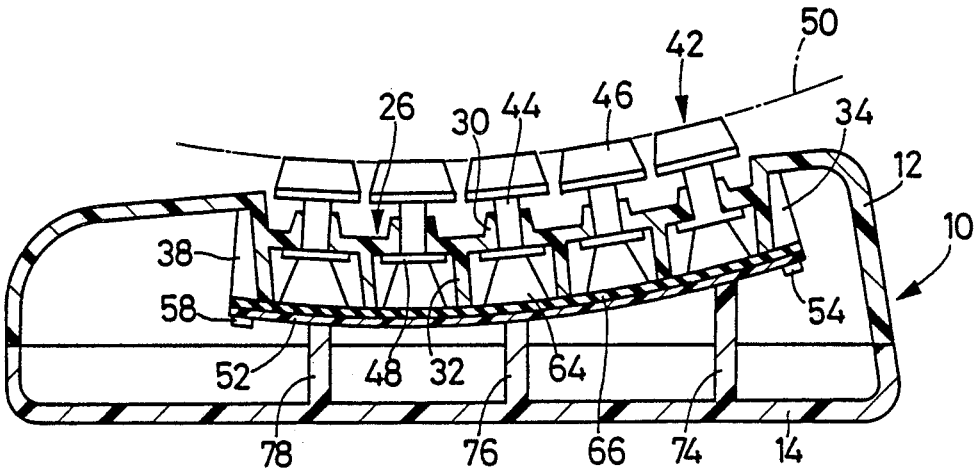
20 Claims, 7 Drawing Sheets