United States Patent [19]

Poirier

[11] **Patent Number: 5,031,920**

[45] **Date of Patent: Jul. 16, 1991**

[54] **SHOT PATTERN CHECKER**

[76] Inventor: **Keith Poirier**, P.O. Box 6833, Aloha, Oreg. 97007

[21] Appl. No.: **522,591**

[22] Filed: **May 14, 1990**

[51] **Int. Cl.**[5] **F41J 1/14**; F41J 1/16; F41J 5/10

[52] **U.S. Cl.** **273/371**; 273/395; 273/397; 273/404; 273/408; 434/20

[58] **Field of Search** 273/358, 371, 395, 403, 273/404, 406, 397; 434/20

[56] **References Cited**

U.S. PATENT DOCUMENTS

3,401,937	9/1968	Rockwood et al.	273/358
3,798,796	3/1974	Stauff et al.	434/20
4,204,683	5/1980	Filippini et al.	273/371
4,534,735	8/1985	Allard et al.	434/20

FOREIGN PATENT DOCUMENTS

0160123	11/1985	European Pat. Off.	434/20
WO85/03118	7/1985	PCT Int'l Appl.	434/20
2156054	10/1985	United Kingdom	273/358

Primary Examiner—Benjamin Layno

Attorney, Agent, or Firm—Robert L. Harrington

[57] **ABSTRACT**

A shooting range that has a target chamber position at the target end. A camera on the chamber transmits an image of the target to the shooting end where it is displayed on a screen of a video micrometer. The video micrometer has cross hair reticles that measure a shot pattern generated on the target. The video micrometer has a tape recorder for recording the transmitted image, a printer for printing a hard copy of the pattern, a keyboard for data input, and is connectable to a computer for input of the shot pattern data.
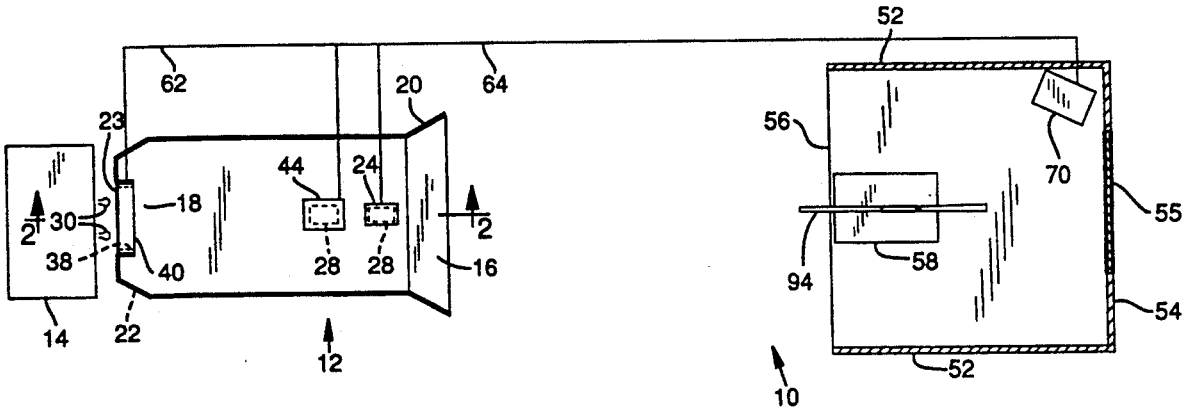
15 Claims, 3 Drawing Sheets