(No Model.)

R. M. HUNTER.

ELECTRIC RAILWAY.

No. 431,720. Patented July 8, 1890.

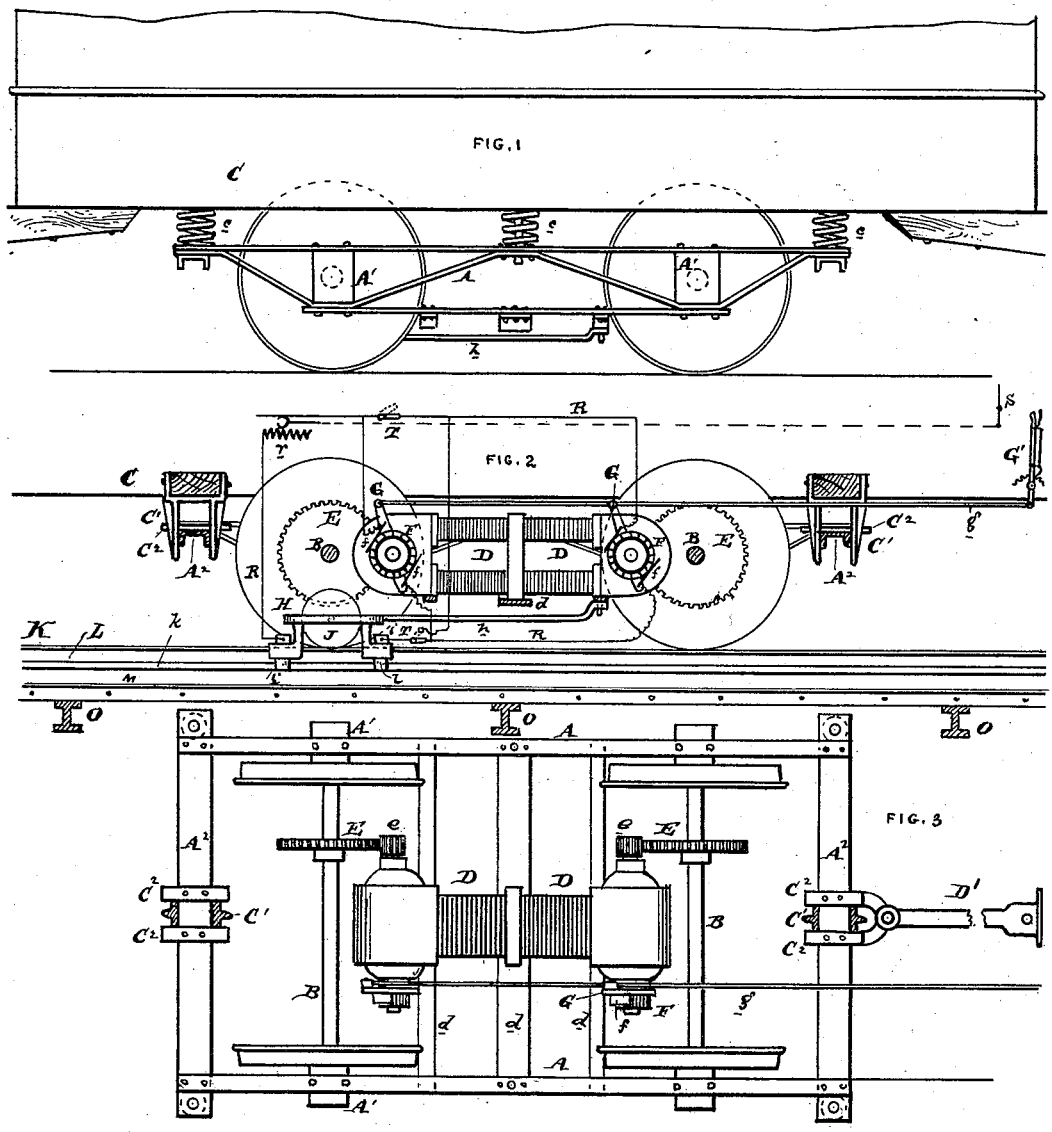

Attest
C. M. Buckingham
H. A. Herr.

Inventor
R. M. Hunter

THE NORRIS PETERS CO., PHOTO-LITHO., WASHINGTON, D. C.