Sept. 10, 1929. C. O. WALPER 1,727,420

WALL BOARD

Filed March 15, 1926

Fig. 1.

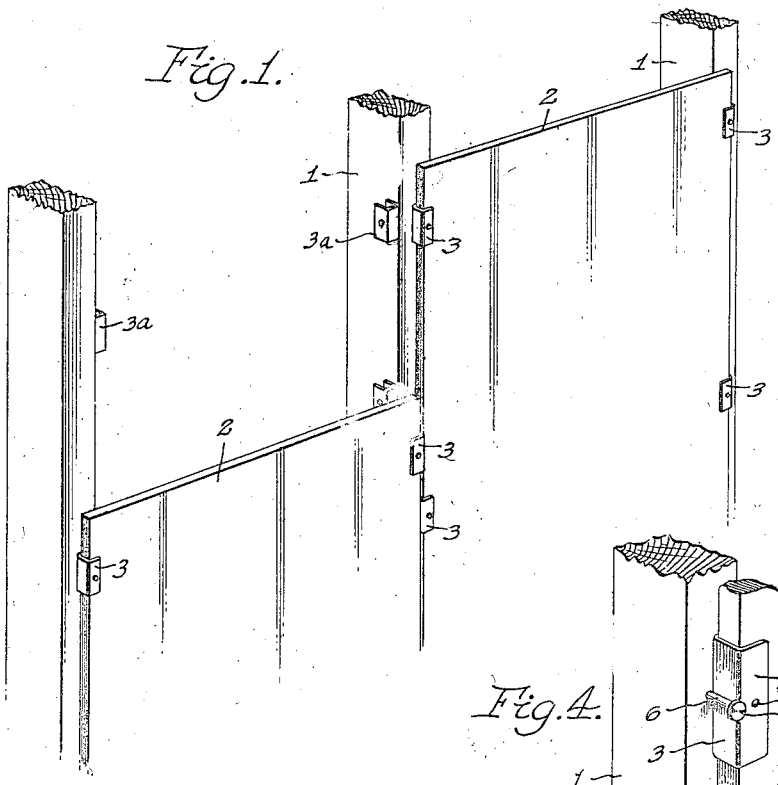

Fig. 4.

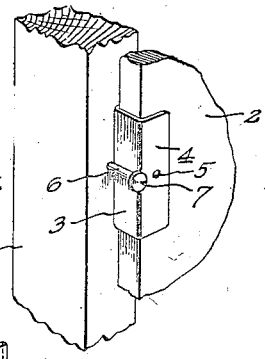

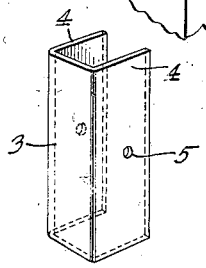

Fig. 3.

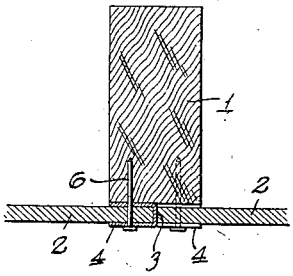

Fig. 2.

Inventor

Curry O. Walper,

By [signature]

Attorneys