US007226420B2

(12) **United States Patent**
Machit et al.

(10) **Patent No.: US 7,226,420 B2**
(45) **Date of Patent: Jun. 5, 2007**

(54) **CUFF VOLUME CONSTRAINING DEVICE**

(75) Inventors: **Denize Marie Machit**, Valley Village, CA (US); **Gregory Randolph Alkire**, Newbury Park, CA (US)

(73) Assignee: **Pronk Technologies Inc.**, South Pasadena, CA (US)

(*) Notice: Subject to any disclaimer, the term of this patent is extended or adjusted under 35 U.S.C. 154(b) by 0 days.

(21) Appl. No.: **11/164,652**

(22) Filed: **Nov. 30, 2005**

(65) **Prior Publication Data**

US 2006/0122518 A1 Jun. 8, 2006

Related U.S. Application Data

(60) Provisional application No. 60/633,352, filed on Dec. 3, 2004.

(51) **Int. Cl.**
A61B 5/00 (2006.01)
G09B 23/28 (2006.01)

(52) **U.S. Cl.** **600/490**; 434/262; 434/268

(58) **Field of Classification Search** ..... None
See application file for complete search history.

(56) **References Cited**

U.S. PATENT DOCUMENTS

3,906,937 A * 9/1975 Aronson 600/493
4,464,123 A * 8/1984 Glover et al. 434/268
4,716,906 A 1/1988 Ruff
5,016,466 A 5/1991 Ness et al.
5,027,641 A 7/1991 Costello, Jr.
5,570,694 A 11/1996 Rometsch
5,800,359 A 9/1998 Medero et al.
2004/0094674 A1 5/2004 Bozmoski et al.
2004/0101814 A1 5/2004 Morris et al.

* cited by examiner

Primary Examiner—Robert L. Nasser
(74) *Attorney, Agent, or Firm*—Michael Blaine Brooks, P.C.; Michael B. Brooks; Rosemarie F. Jones

(57) **ABSTRACT**

A system, method, and apparatus for testing a non-invasive blood pressure measurement device wherein a blood pressure monitor, a blood pressure cuff, and a blood pressure simulator are pneumatically connected and the blood pressure cuff is inserted into the aperture of an expansion-limiting or cuff volume constraining element. A cuff volume constraining device is made of flexible material having one or more apertures for constraining cuff volume during cuff expansion during blood pressure measurement device testing.
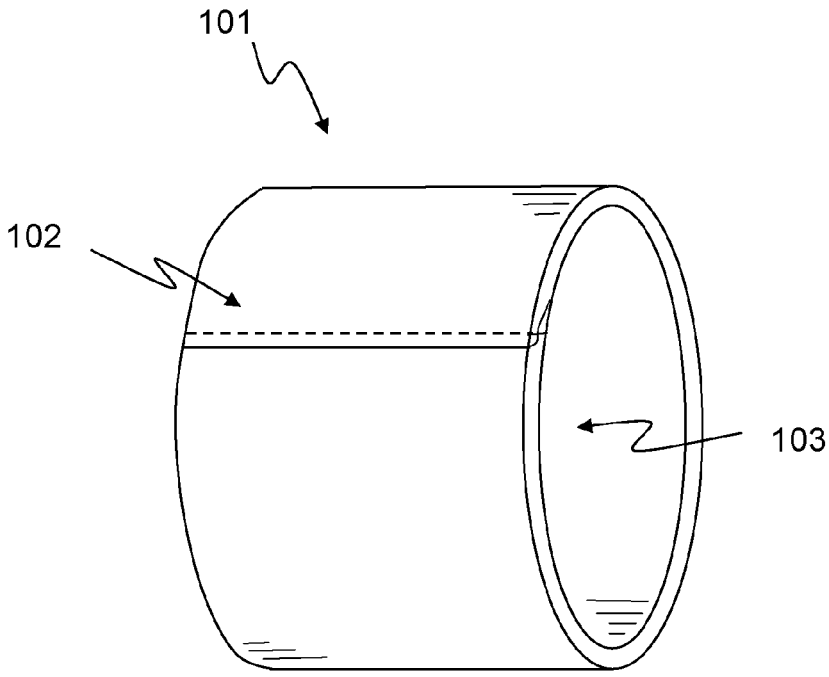
21 Claims, 8 Drawing Sheets