Nov. 15, 1955 A. SCHULZ ET AL 2,723,820

KNOCK-DOWN CARDBOARD DISPLAY CRADLE

Filed July 22, 1948 3 Sheets-Sheet 1

Fig. 1.

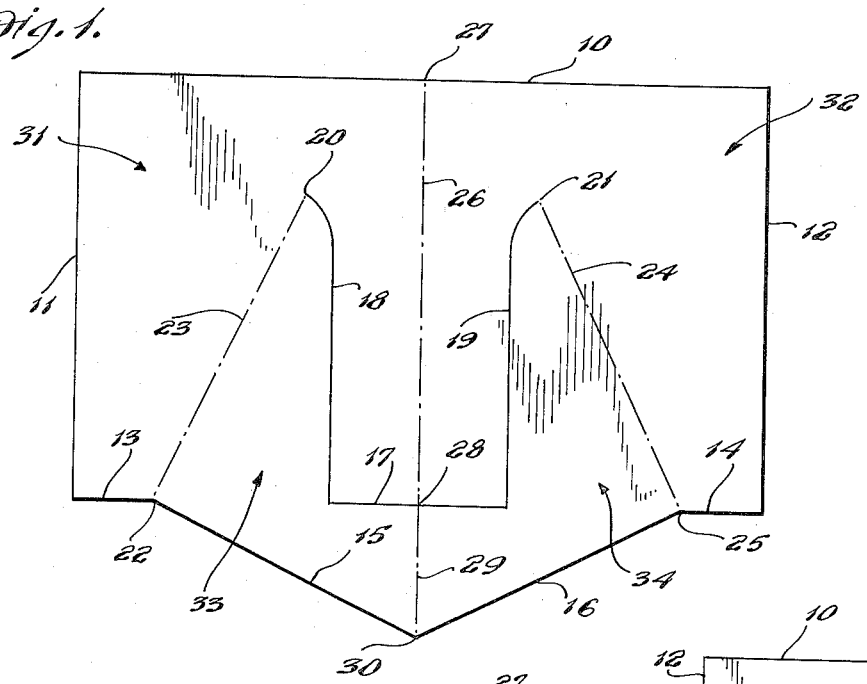

Fig. 2.

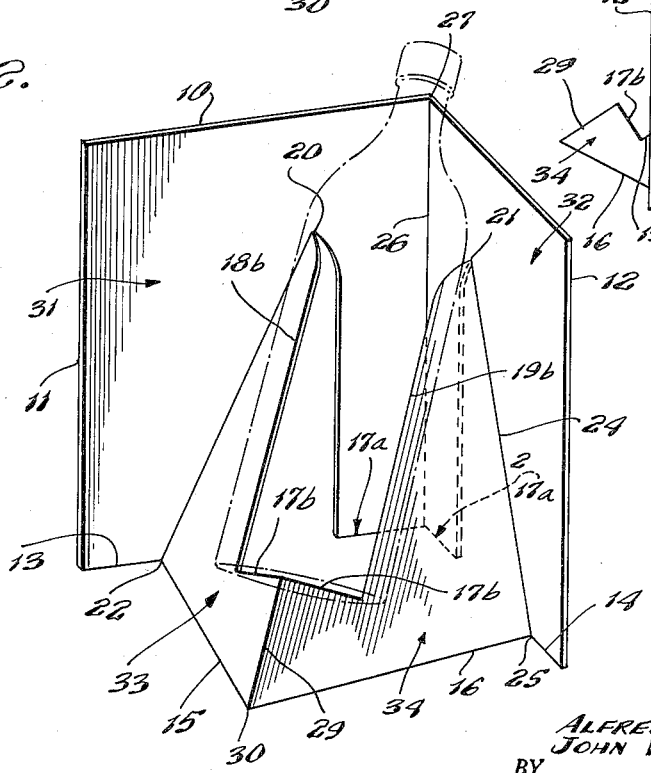

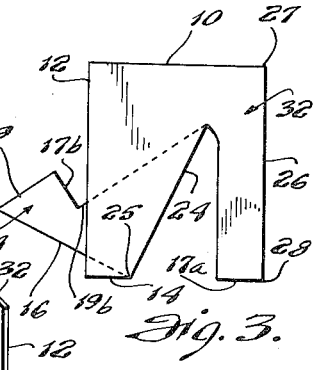

Fig. 3.

INVENTORS
ALFRED SCHULZ
JOHN WUENSCH
BY
Frederick Breitenfeld
ATTORNEY