PROSTHETIC PARTS AND METHODS OF MAKING THE SAME

Filed Oct. 23, 1961 6 Sheets-Sheet 2

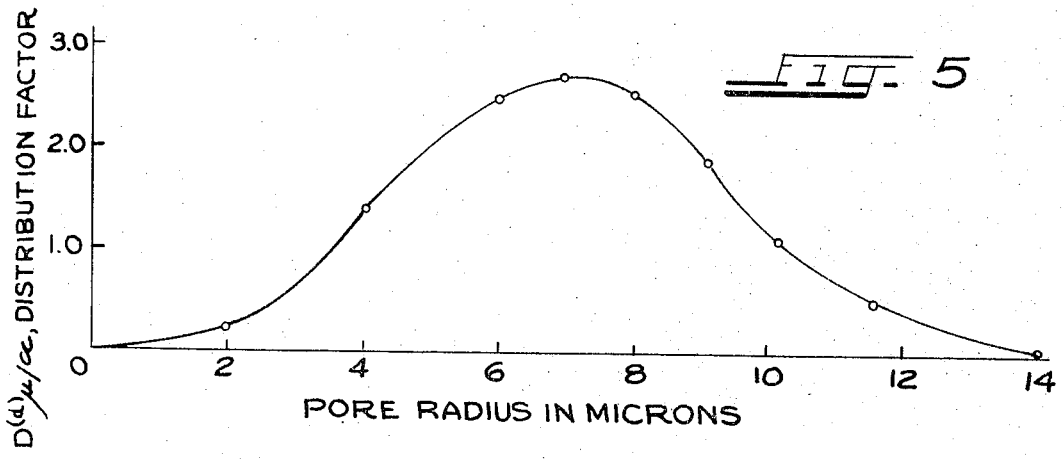

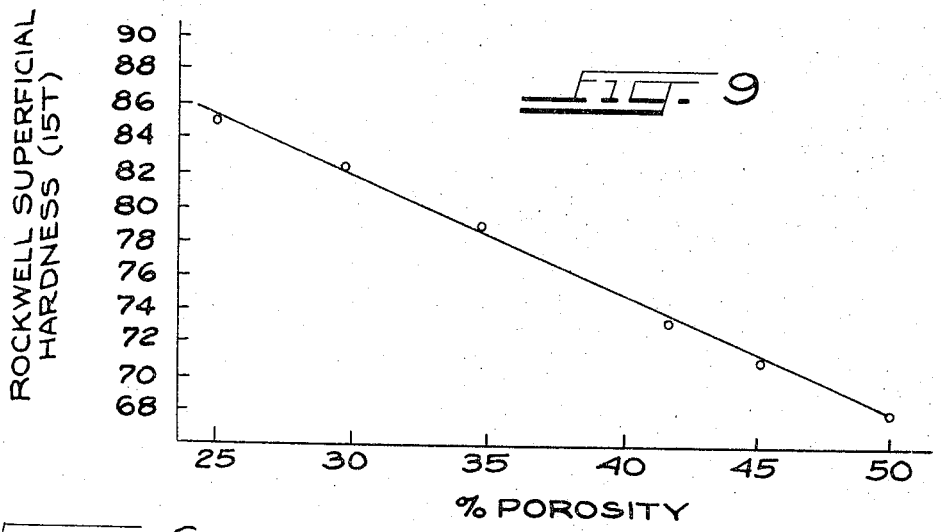

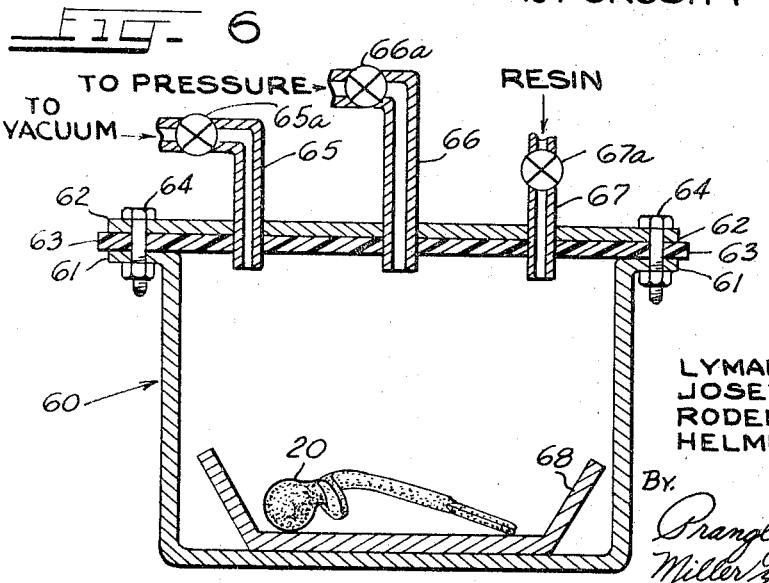

INVENTORS.
LYMAN W. SMITH
JOSEPH F. ESTES
RODERICK J. COWLES
HELMUT BRUCHMANN
By. Prangley, Baird, Clayton, Miller & Vogel
Att'ys.