US009411320B1

(12) **United States Patent**
Liang et al.

(10) **Patent No.: US 9,411,320 B1**
(45) **Date of Patent: Aug. 9, 2016**

(54) **INTELLIGENT WATCH**

(71) Applicant: **Quanta Computer Inc.**, Taoyuan (TW)

(72) Inventors: **Yuan-Chen Liang**, Taoyuan (TW); **Cheng-Hao Wu**, Taoyuan (TW); **Ya-Chu Chuang**, Taoyuan (TW); **Chi-Cheng Wu**, Taoyuan (TW); **Hsuan-Hao Hsu**, Taoyuan (TW)

(73) Assignee: **QUANTA COMPUTER INC.**, Taoyuan (TW)

(*) Notice: Subject to any disclaimer, the term of this patent is extended or adjusted under 35 U.S.C. 154(b) by 0 days.

(21) Appl. No.: **14/918,075**

(22) Filed: **Oct. 20, 2015**

(30) **Foreign Application Priority Data**

Jul. 23, 2015 (TW) 104211905

(51) **Int. Cl.**
G04G 21/00 (2010.01)
G04G 9/00 (2006.01)

(52) **U.S. Cl.**
CPC . ***G04G 21/00*** (2013.01); ***G04G 9/00*** (2013.01)

(58) **Field of Classification Search**
CPC G04G 17/08; G04G 21/08; G04G 21/00; G04C 3/005; G06F 1/163; G06F 3/0362; G04B 9/00
USPC 200/61.56, 223
See application file for complete search history.

(56) **References Cited**

U.S. PATENT DOCUMENTS

4,678,344	A *	7/1987	Inoue	G04C 3/005 368/10
6,556,222	B1 *	4/2003	Narayanaswami	G04C 9/0064 368/295
6,575,618	B1 *	6/2003	Inoue	G01D 5/2451 250/231.13
7,874,722	B2 *	1/2011	Clarkson	G04B 37/1486 368/281
8,001,488	B1 *	8/2011	Lam	G06F 3/0238 345/156
8,511,890	B2 *	8/2013	Andren	G04B 19/283 368/187
2002/0101457	A1 *	8/2002	Lang	G06F 1/163 715/856
2003/0070106	A1 *	4/2003	Kosuda	G06F 1/06 713/500
2006/0151982	A1 *	7/2006	Mills	A61G 5/045 280/755

* cited by examiner

Primary Examiner — Sean Kayes
(74) *Attorney, Agent, or Firm* — Rabin & Berdo, P.C.

(57) **ABSTRACT**

An intelligent watch includes a main body, a trigger switch, an inner-ring body and an outer-ring body. The trigger switch is disposed in the main body. The inner-ring body is pressably engaged on the main body to be pressed for trigger the trigger switch. The outer-ring body is rotatably engaged on the main body and surrounds the inner-ring body.
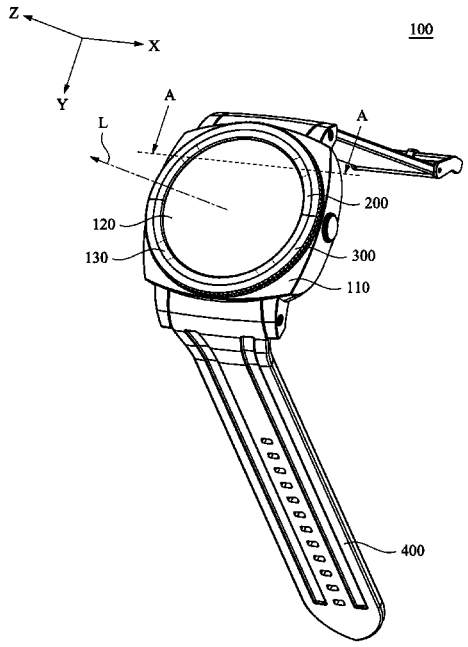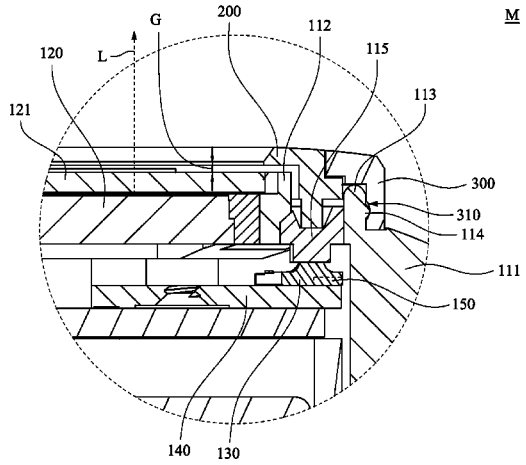
8 Claims, 4 Drawing Sheets