US009411020B2

(12) **United States Patent**
Hong

(10) **Patent No.: US 9,411,020 B2**
(45) **Date of Patent: Aug. 9, 2016**

(54) **BATTERY PACK AND METHOD OF CONTROLLING THE SAME**

(75) Inventor: **Seong-Pyo Hong**, Yongin-si (KR)

(73) Assignee: **Samsung SDI Co., Ltd.**, Gyeonggi-Do (KR)

(*) Notice: Subject to any disclaimer, the term of this patent is extended or adjusted under 35 U.S.C. 154(b) by 313 days.

(21) Appl. No.: **13/588,540**

(22) Filed: **Aug. 17, 2012**

(65) **Prior Publication Data**

US 2013/0057290 A1 Mar. 7, 2013

(30) **Foreign Application Priority Data**

Sep. 1, 2011 (KR) 10-2011-0088527

(51) **Int. Cl.**
G01R 31/36 (2006.01)
H01M 10/48 (2006.01)
H01M 10/42 (2006.01)

(52) **U.S. Cl.**
CPC ***G01R 31/3651*** (2013.01); ***H01M 10/42*** (2013.01); ***H01M 10/48*** (2013.01); ***H01M 10/486*** (2013.01); *H01M 2010/4271* (2013.01)

(58) **Field of Classification Search**
CPC G01R 31/006; G01R 31/2889; G01R 31/3658
USPC 324/400, 426–434; 361/159
See application file for complete search history.

(56) **References Cited**

U.S. PATENT DOCUMENTS

5,783,998 A * 7/1998 Nakajou et al. 340/636.15
7,583,053 B2 * 9/2009 Kamohara 320/106
8,143,854 B2 * 3/2012 Maegawa et al. 320/125
2005/0046389 A1 3/2005 Kim
2010/0010769 A1 * 1/2010 Houldsworth 702/130
2010/0194341 A1 * 8/2010 Anupindi et al. 320/118
2011/0169459 A1 * 7/2011 Chen et al. 320/160

FOREIGN PATENT DOCUMENTS

JP 2001-110459 A 4/2001
JP 2003-157912 A 5/2003
JP 2004-014228 A 1/2004
JP 2010-086764 A 4/2010
KR 10-2004-0041008 A 5/2004
KR 10-2005-0035792 A 4/2005
KR 10-2007-0105014 A 10/2007

OTHER PUBLICATIONS

Korean Office Action dated Dec. 20, 2012 for Korean Patent Application No. KR 10-2011-0088527 which corresponds to captioned U.S. Appl. No. 13/588,540.

Korean Notice of Allowance dated Jun. 17, 2013 for Korean Patent Application No. KR 10-2011-0088527 which corresponds to captioned U.S. Appl. No. 13/588,540.

* cited by examiner

Primary Examiner — Melissa Koval
Assistant Examiner — Trung Nguyen
(74) *Attorney, Agent, or Firm* — Knobbe, Martens, Olson & Bear, LLP

(57) **ABSTRACT**

A battery pack and a method of controlling the battery pack are disclosed. In one embodiment, the battery pack includes a battery, a monitoring unit configured to monitor a voltage of the battery and provide a monitoring result, a memory storing a full-charge capacity (FCC) of the battery, and a controller configured to update the stored FCC when the monitoring result satisfies predetermined conditions during a falling period of the voltage.
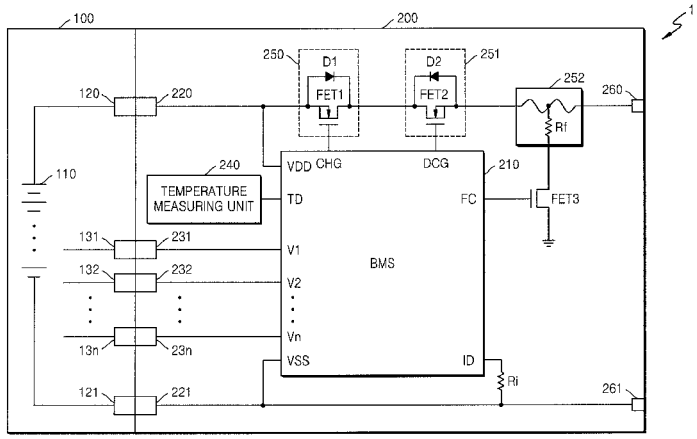
17 Claims, 4 Drawing Sheets