US009510720B2

(12) **United States Patent**
Jang

(10) **Patent No.: US 9,510,720 B2**
(45) **Date of Patent: Dec. 6, 2016**

(54) **AUTOMATIC CLEANER**

(71) Applicant: **Jaewon Jang**, Seoul (KR)

(72) Inventor: **Jaewon Jang**, Seoul (KR)

(73) Assignee: **LG ELECTRONICS INC.**, Seoul (KR)

(*) Notice: Subject to any disclaimer, the term of this patent is extended or adjusted under 35 U.S.C. 154(b) by 794 days.

(21) Appl. No.: **13/861,182**

(22) Filed: **Apr. 11, 2013**

(65) **Prior Publication Data**

US 2014/0109338 A1 Apr. 24, 2014

(30) **Foreign Application Priority Data**

Oct. 18, 2012 (KR) 1020120115950

(51) **Int. Cl.**

A47L 9/28	(2006.01)
A47L 11/40	(2006.01)
A47L 9/06	(2006.01)
A47L 9/04	(2006.01)

(52) **U.S. Cl.**

CPC ***A47L 11/4066*** (2013.01); ***A47L 9/04*** (2013.01); ***A47L 11/4069*** (2013.01); *A47L 9/0488* (2013.01); *A47L 9/064* (2013.01); *A47L 9/0633* (2013.01); *A47L 9/0646* (2013.01); *A47L 9/0653* (2013.01); *A47L 2201/00* (2013.01)

(58) **Field of Classification Search**

CPC A47L 9/0633; A47L 9/064; A47L 9/0646; A47L 9/0653; A47L 9/0488; A47L 11/4066; A47L 11/4069; A47L 9/04; A47L 2201/00; A47L 2201/06

USPC 15/319

IPC A47L 9/28

See application file for complete search history.

(56) **References Cited**

U.S. PATENT DOCUMENTS

7,610,651	B2 *	11/2009	Baek	A47L 5/14 15/345
8,806,711	B2 *	8/2014	Jang	A47L 9/009 15/319
2005/0166355	A1 *	8/2005	Tani	A47L 9/2805 15/319
2006/0010638	A1 *	1/2006	Shimizu	A47L 9/009 15/319
2006/0021168	A1 *	2/2006	Nishikawa	A47L 9/009 15/49.1

FOREIGN PATENT DOCUMENTS

JP	62-292124	A	12/1987
JP	2011-045694	A	3/2011

* cited by examiner

Primary Examiner — David Redding

(74) *Attorney, Agent, or Firm* — Dentons US LLP

(57) **ABSTRACT**

An automatic cleaner includes a casing having a suction port, a suction device disposed in the casing to suction foreign substances through the suction port, a moving device that moves the casing, and a side brush assembly movably installed on the casing. The side brush assembly includes a movable member movably disposed on the casing, a first driving device that generates power for moving the movable member, a brush rotatably mounted on the movable member, and a second driving device that generates power for rotating the brush.
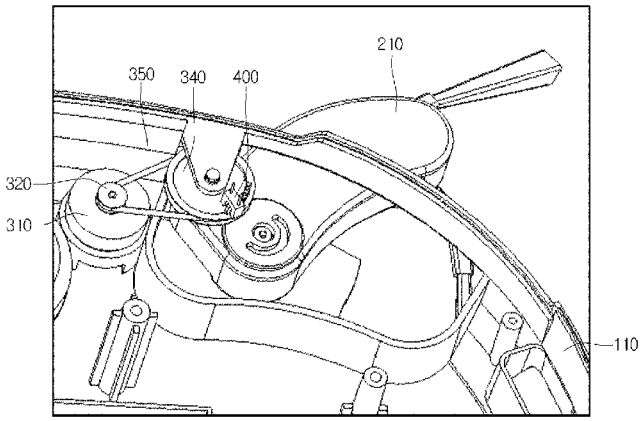
18 Claims, 8 Drawing Sheets