US009409720B2

(12) **United States Patent**
**Togiya**

(10) **Patent No.: US 9,409,720 B2**
(45) **Date of Patent: Aug. 9, 2016**

(54) **MEDIUM CARRYING MECHANISM**

(75) Inventor: **Hajime Togiya**, Gumma (JP)

(73) Assignee: **OKI ELECTRIC INDUSTRY CO., LTD.**, Tokyo (JP)

( * ) Notice: Subject to any disclaimer, the term of this patent is extended or adjusted under 35 U.S.C. 154(b) by 0 days.

(21) Appl. No.: **13/990,786**

(22) PCT Filed: **Nov. 4, 2011**

(86) PCT No.: **PCT/JP2011/075486**

§ 371 (c)(1),
(2), (4) Date: **May 30, 2013**

(87) PCT Pub. No.: **WO2012/077440**

PCT Pub. Date: **Jun. 14, 2012**

(65) **Prior Publication Data**

US 2013/0248334 A1 Sep. 26, 2013

(30) **Foreign Application Priority Data**

Dec. 8, 2010 (JP) ..... 2010-273994

(51) **Int. Cl.**

| | |
|---|---|
| ***B65G 15/00*** | (2006.01) |
| ***B65G 37/00*** | (2006.01) |
| ***B65H 5/06*** | (2006.01) |
| ***B65H 5/02*** | (2006.01) |
| ***B65H 5/38*** | (2006.01) |

(52) **U.S. Cl.**

CPC ..... ***B65G 37/00*** (2013.01); ***B65H 5/025*** (2013.01); ***B65H 5/062*** (2013.01); ***B65H 5/38*** (2013.01); *B65H 2402/441* (2013.01); *B65H 2404/1531* (2013.01); *B65H 2404/264* (2013.01); *B65H 2404/513* (2013.01); *B65H 2404/611* (2013.01); *B65H 2701/1912* (2013.01)

(58) **Field of Classification Search**

CPC ..... B65H 5/025
USPC ..... 198/836.1, 836.2, 620, 624, 626.1; 271/272, 275

See application file for complete search history.

(56) **References Cited**

U.S. PATENT DOCUMENTS

| | | | | | |
|---|---|---|---|---|---|
| 3,924,847 | A | * | 12/1975 | Pescetto | G07D 7/04 194/202 |
| 3,999,696 | A | | 12/1976 | Reba et al. | |
| 4,453,870 | A | * | 6/1984 | Bean | 414/789 |
| 5,054,768 | A | | 10/1991 | Iseda | |
| 5,121,916 | A | * | 6/1992 | Sanchez | 271/272 |
| 5,205,551 | A | * | 4/1993 | Nagano et al. | 271/225 |
| 5,685,539 | A | * | 11/1997 | Janatka et al. | 271/273 |
| 5,697,880 | A | * | 12/1997 | Auerbach | 493/420 |

(Continued)

FOREIGN PATENT DOCUMENTS

| | | | |
|---|---|---|---|
| JP | 60-213655 | A | 10/1985 |
| JP | 1986/92651 | U | 6/1986 |

(Continued)

*Primary Examiner* — William R Harp
(74) *Attorney, Agent, or Firm* — Rabin & Berdo, P.C.

(57) **ABSTRACT**

Provided is an inexpensive and lightweight carrying mechanism in which side frames and a guide plate are not required to be formed separately and assembled and a small number of components are required. A pair of right and left side frames (**2***a*, **2***b*) and a medium guide (**3**) are integrally formed to form a frame structure body (**1**). On one surface side of the medium guide (**3**) of the frame structure body (**1**), a carrying belt (**8**) for carrying a medium is disposed, and on the other surface side of the medium guide (**3**), a driven roller (**10**) for holding the medium between the carrying belt (**8**) and itself is disposed.
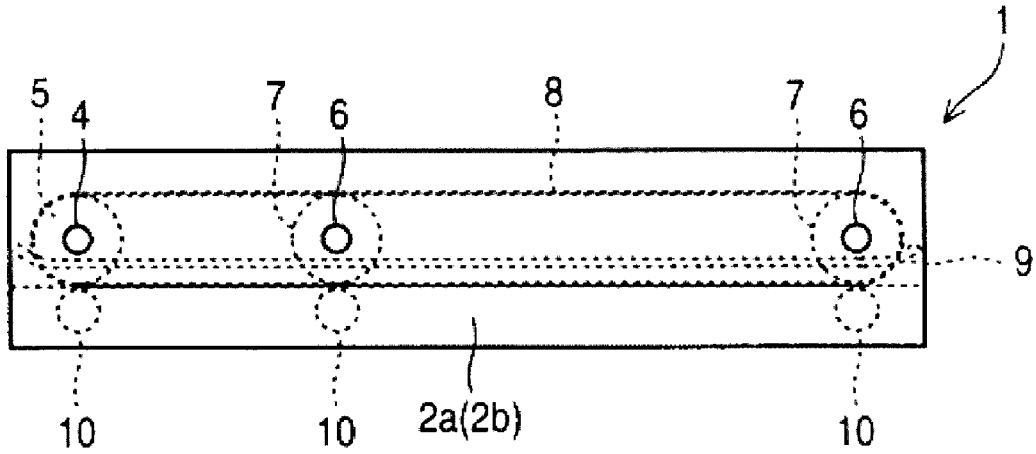
**21 Claims, 5 Drawing Sheets**