US009409220B2

(12) **United States Patent**
Henniger et al.

(10) **Patent No.: US 9,409,220 B2**
(45) **Date of Patent: Aug. 9, 2016**

(54) **EXERCISE EQUIPMENT, CONNECTOR OR ANCHOR, AND METHOD OF MAKING SAME**

(71) Applicants: **William Henniger**, Columbus, OH (US); **Ian MacClean**, Columbus, OH (US)

(72) Inventors: **William Henniger**, Columbus, OH (US); **Ian MacClean**, Columbus, OH (US)

(73) Assignee: **COULTER VENTURES, LLC**, Columbus, OH (US)

(*) Notice: Subject to any disclaimer, the term of this patent is extended or adjusted under 35 U.S.C. 154(b) by 0 days.

(21) Appl. No.: **14/065,672**

(22) Filed: **Oct. 29, 2013**

(65) **Prior Publication Data**

US 2014/0119811 A1 May 1, 2014

Related U.S. Application Data

(60) Provisional application No. 61/721,306, filed on Nov. 1, 2012.

(51) **Int. Cl.**

B21D 5/16	(2006.01)
F16B 9/02	(2006.01)
B21D 53/36	(2006.01)
E04B 1/19	(2006.01)

(52) **U.S. Cl.**

CPC ***B21D 5/16*** (2013.01); ***B21D 53/36*** (2013.01); ***F16B 9/026*** (2013.01); *E04B 2001/1918* (2013.01); *E04B 2001/1963* (2013.01); *Y10T 403/39* (2015.01)

(58) **Field of Classification Search**

CPC B21D 5/16; E04B 2001/1918; E04B 2001/1963; E04B 2001/2406; E04B 2001/405; E04F 11/1812; E04F 11/1814; F16B 9/02; F16B 9/026; F16B 12/42

USPC 403/187, 190, 192, 199, 262

See application file for complete search history.

(56) **References Cited**

U.S. PATENT DOCUMENTS

1,214,738	A *	2/1917	Wolf	403/187
1,945,925	A *	2/1934	Stiefel	E04B 1/2608 403/2
2,990,590	A *	7/1961	Graveley	E04F 10/08 403/189
4,611,948	A *	9/1986	Johnson	B60P 3/1033 403/187
5,186,571	A *	2/1993	Hentzschel	403/231
6,209,268	B1 *	4/2001	Schmidt	E04B 1/2608 52/665
8,833,030	B2 *	9/2014	Zimmerman	E04B 1/2608 248/300
8,834,057	B2 *	9/2014	Adams, Jr.	403/233
8,839,588	B2 *	9/2014	Philbin	E04B 1/38 52/704
2011/0107710	A1 *	5/2011	Sias	52/655.1
2013/0065738	A1 *	3/2013	Henniger	A63B 21/0724 482/104

FOREIGN PATENT DOCUMENTS

GB	2487239	*	7/2012

* cited by examiner

Primary Examiner — Josh Skroupa

(74) *Attorney, Agent, or Firm* — Vorys, Sater, Seymour and Pease LLP; William L. Klima

(57) **ABSTRACT**

An exercise equipment connector and exercise equipment. Also provided is a method of making an exercise equipment connector.
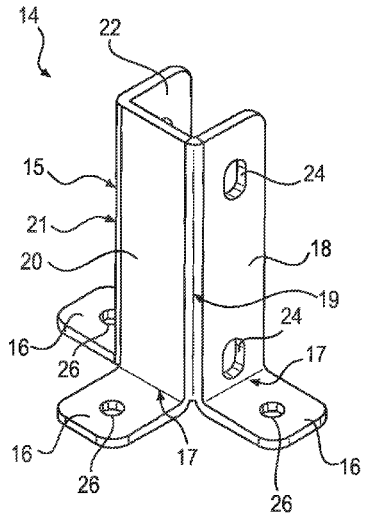
30 Claims, 2 Drawing Sheets