United States Patent [19]

Schifrin

[11] **Patent Number: Des. 304,920**

[45] **Date of Patent: ** Dec. 5, 1989**

[54] **COMBINED REAR VIEW MIRROR, CLOCK AND RADIO**

[76] Inventor: **Arthur Schifrin,** 4652 Via Marina, Marina Del Rey, Calif. 90292

[**] Term: **14 Years**

[21] Appl. No.: **67,858**

[22] Filed: **Jun. 26, 1987**

[52] **U.S. Cl.** **D12/188;** D14/168

[58] **Field of Search** D14/157, 168, 170, 171, D14/172, 188, 189, 192, 193, 194, 195, 196, 197, 198, 257, 258, 299; D12/188; 455/344, 345, 346, 347, 350, 351

[56] **References Cited**

U.S. PATENT DOCUMENTS

D. 82,355	10/1930	Weir et al.	D12/188
D. 85,163	9/1931	Cook	D12/188
D. 294,829	3/1988	Hogue	D14/194
D. 299,491	1/1989	Masuda	D12/188

OTHER PUBLICATIONS

J. C. Whitney & Co. Catalog No. 474J, p. C-2, bottom center-Radar Detector/Mirror With Clock.

Primary Examiner—Bernard Ansher
Assistant Examiner—Theodore M. Shooman
Attorney, Agent, or Firm—Lilling & Greenspan

[57] **CLAIM**

The ornamental design for a combined rear view mirror, clock and radio, as shown and described.

DESCRIPTION
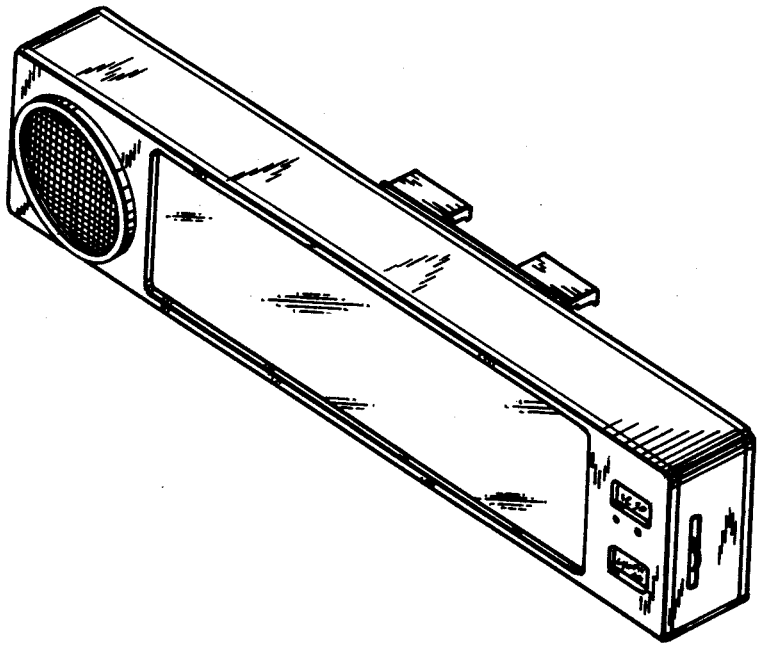
FIG. **1** is a top, front and right side perspective view of a combined rear view mirror, clock and radio showing my new design;
FIG. **2** is a front elevational view thereof;
FIG. **3** is a top plan view thereof;
FIG. **4** is a rear elevational view thereof;
FIG. **5** is a bottom plan view thereof;
FIG. **6** is a right side elevational view thereof; and
FIG. **7** is a left side elevational view thereof.