Oct. 3, 1961 C. N. CROSS 3,002,720

HINGE JOINTS FOR DISPLAY MOUNT ELEMENTS

Filed March 30, 1959

Fig. 1.

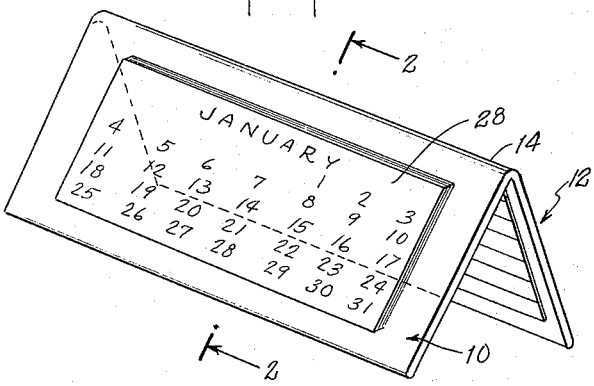

Fig. 2.

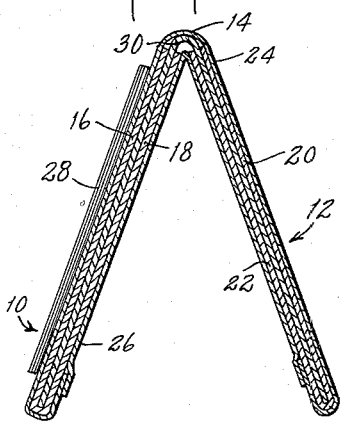

Fig. 3.

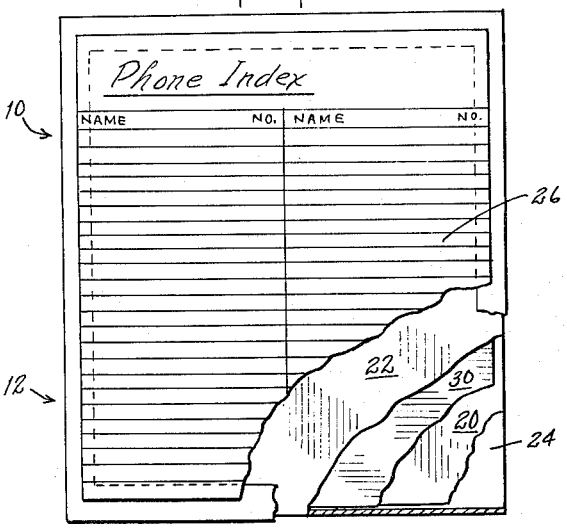

Fig. 4.

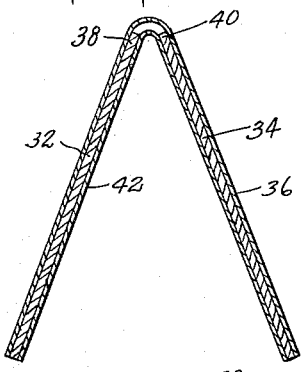

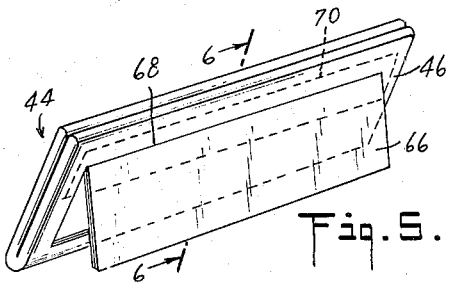

Fig. 5.

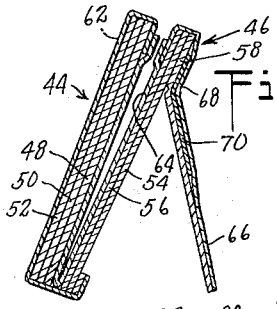

Fig. 6.

Fig. 8.

Fig. 7.

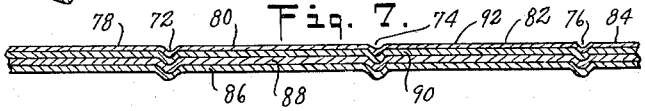

INVENTOR.
CARROLL N. CROSS
BY
ATTORNEY