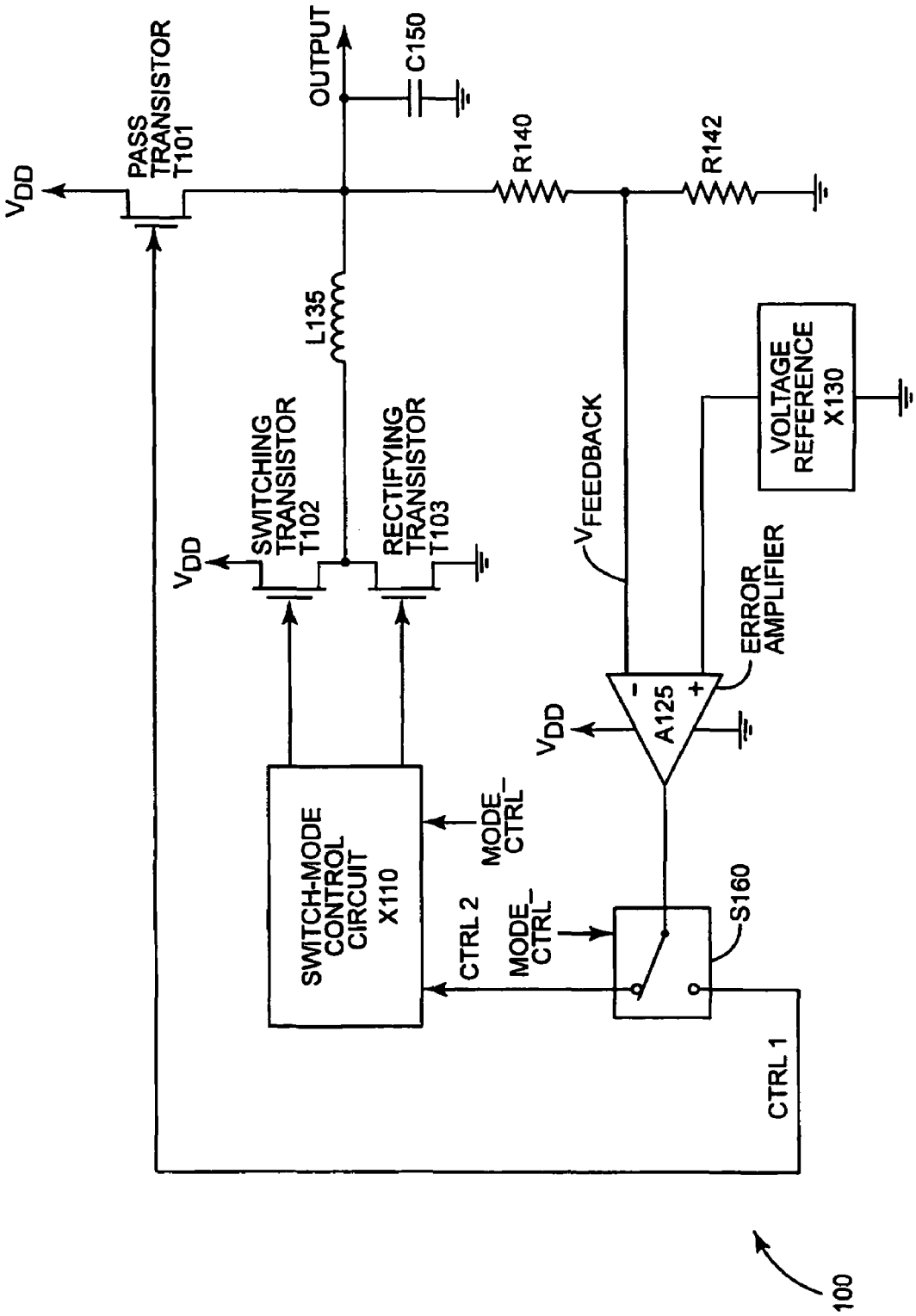
VDD
PASS TRANSISTOR T101
OUTPUT
C150
R140
R142
L135
SWITCHING TRANSISTOR T102
RECTIFYING TRANSISTOR T103
VFEEDBACK
VOLTAGE REFERENCE X130
ERROR AMPLIFIER
A125
SWITCH-MODE CONTROL CIRCUIT X110
MODE_CTRL
CTRL 2
S160
CTRL 1
100

FIG. 1